K CONNECTOR LIST

A 1
Gray

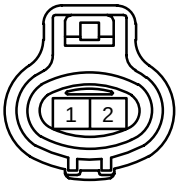

A 2
Black

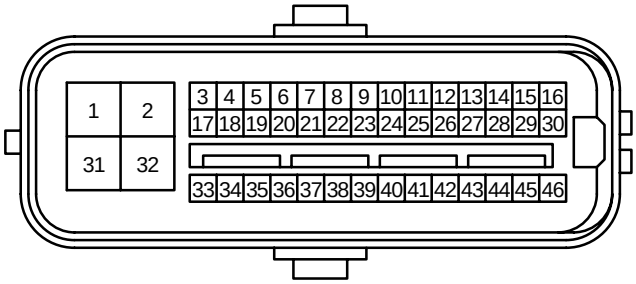

A 3
Gray



A 4
Gray



A 5
Dark Gray



A 6
Black



A 7

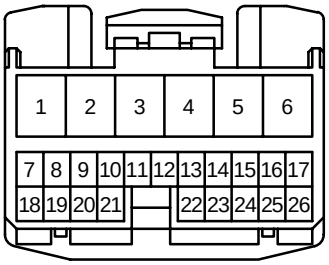

A 8

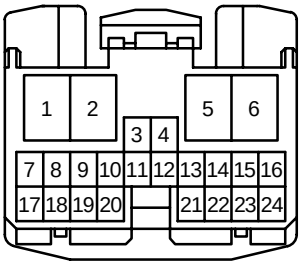

A 9
Black

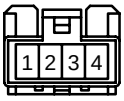

A10
Black

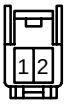

A11

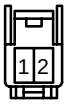

A12
Brown

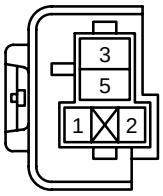

A13
Black

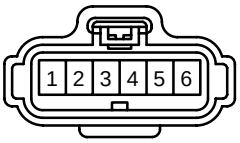

A14
Black

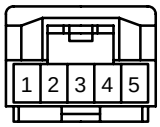

A15
Black

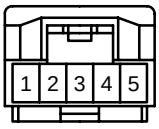

A16
Black

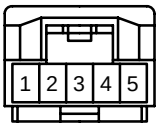

A17
Yellow

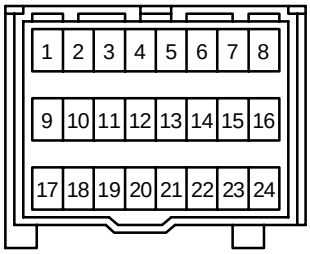

A18
Yellow

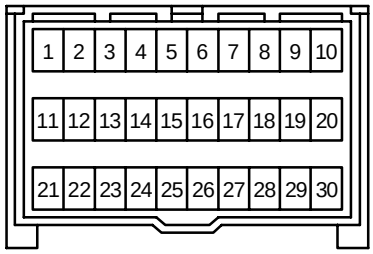

A19
Yellow

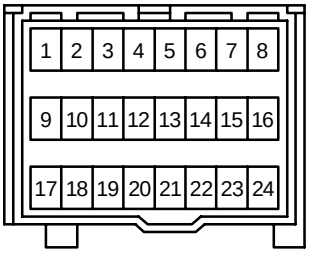

A20
Orange

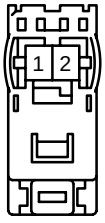

A21
Black

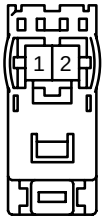

A22
Yellow

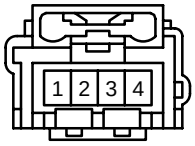

A23



A24

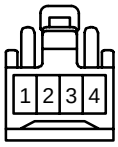

A25
Black



A26
Black



B 1
Black



B 2
Black



B 3
Black

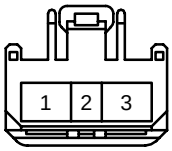

B 4
Black

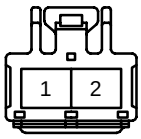

B 5

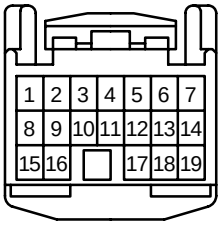

B 6

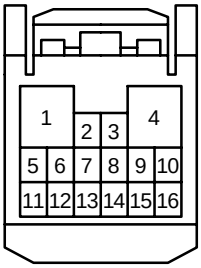

B 7

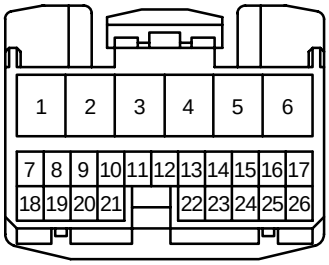

B 8
Black



B 9

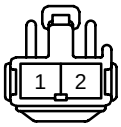

B10
Black

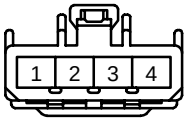

B11

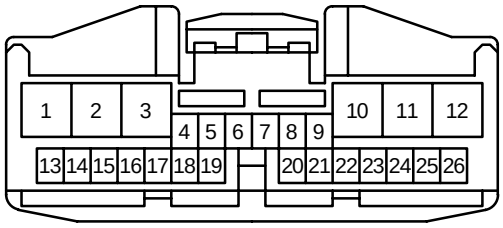

B12
Orange

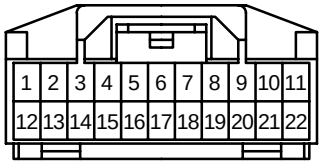

B13

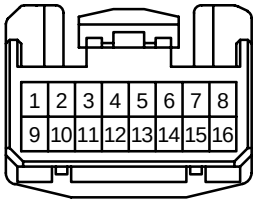

B14

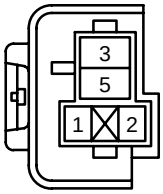

B15



B16

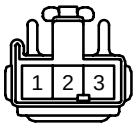

B17
Gray



B18

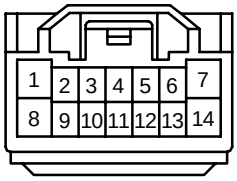

B19

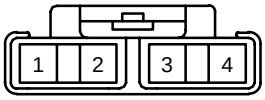

C 1



C 2
Black



C 3
Yellow



C 4
Orange

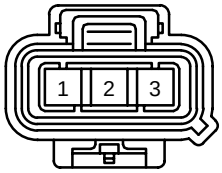

C 5
Gray



C 6
Gray

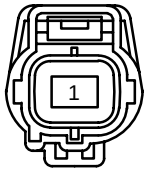

C 7
Black

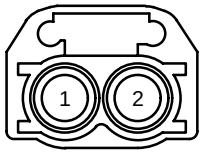

K CONNECTOR LIST

C 8

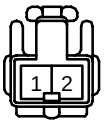

C 9
Black

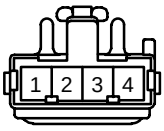

C10

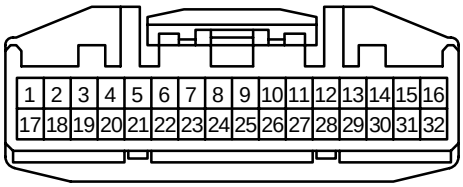

C11

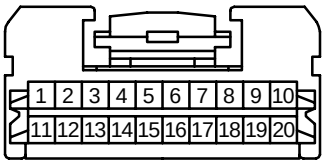

C12

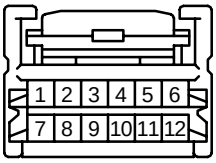

C13

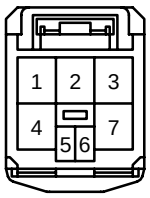

C14

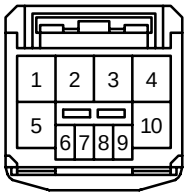

C15
Yellow

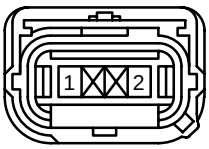

C16
Yellow

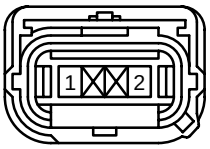

C17
Black

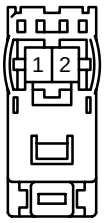

C18
Black

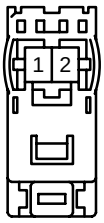

C19
Dark Gray



C20
Gray

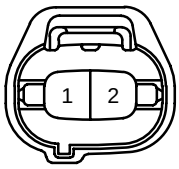

D 1

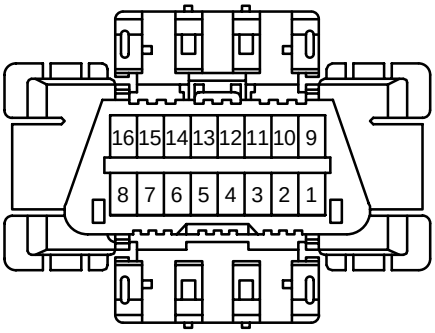

D 2

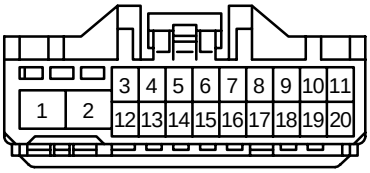

D 3
Black



D 4

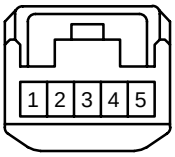

D 5



D 6



D 7



D 8



D 9



D10



D11

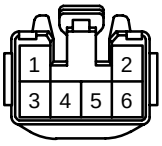

D12

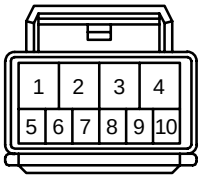

D13

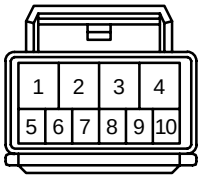

D14

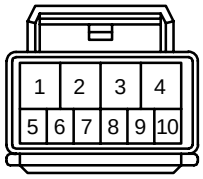

D15

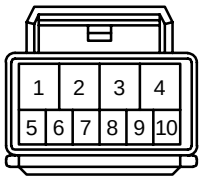

D16

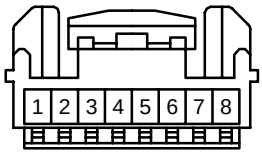

D17

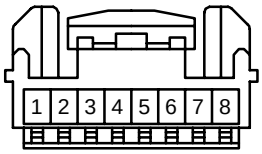

D18



E 1
Dark Gray



E 3



E 4

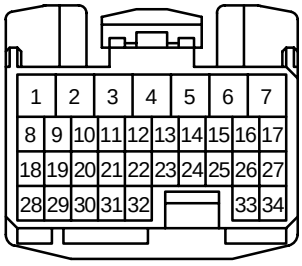

E 5

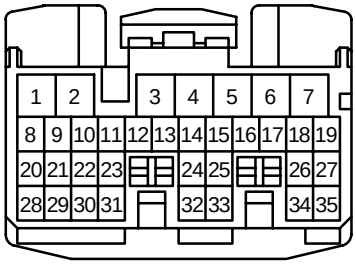

E 6

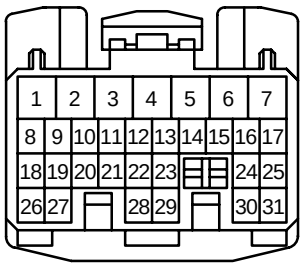

E 7

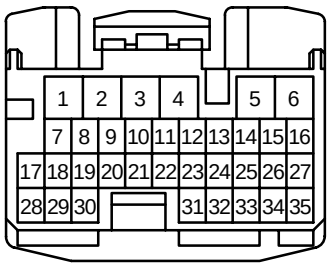

E 8

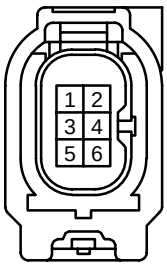

E 9

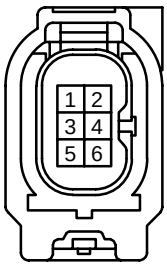

E10



F 1
Yellow



F 2
Yellow



F 3
Brown



F 4
Brown



F 5
Black

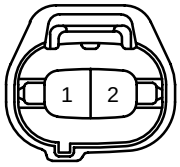

F 6
Black

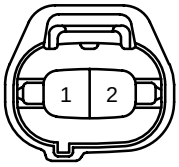

F 7
Gray

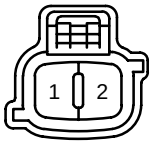

F 8
Gray

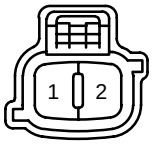

F 9
Black

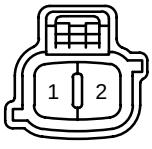

F10



F11

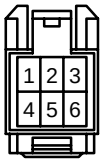

F12



F13



F14
Gray

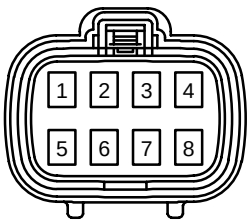

F15

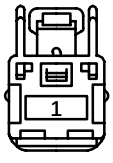

K CONNECTOR LIST

F16

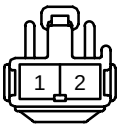

G 1

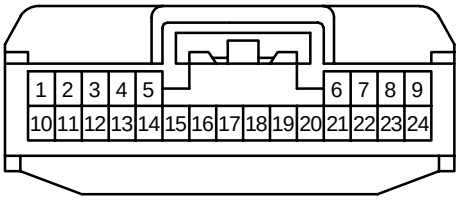

G 2

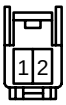

G 3
Black

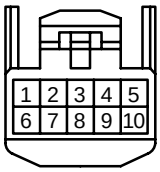

H 1
Black



H 2
Black



H 3



H 4



H 5



H 6



H 7

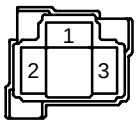

H 8

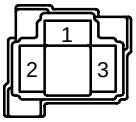

H 9
Black



H10
Black



H11

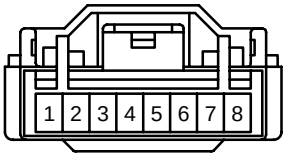

H12

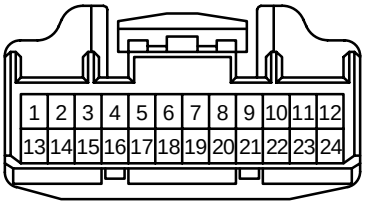

H13
Dark Gray



H14
Gray

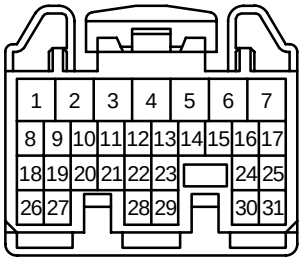

H15
Gray

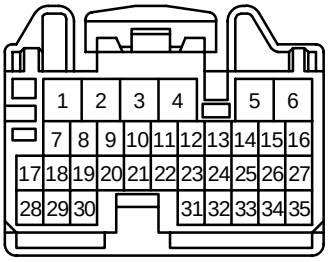

H16
Gray

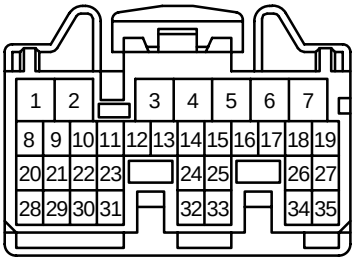

H17
Gray

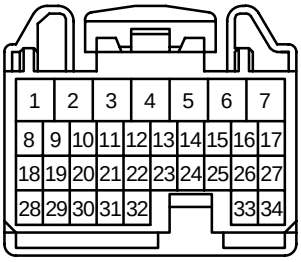

H18
Black

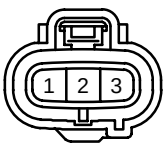

H19

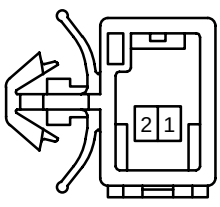

H20

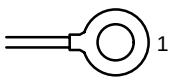

H21

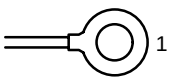

I 1
Black

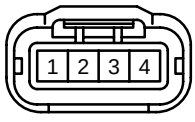

I 2
Gray

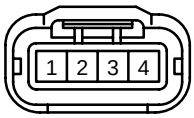

I 3
Black

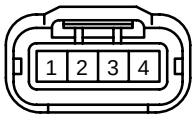

I 4
Gray

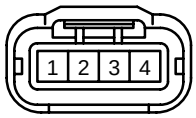

I 5
Gray

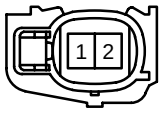

I 6
Gray

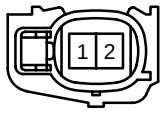

I 7
Gray

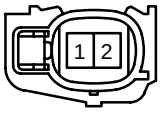

I 8
Gray

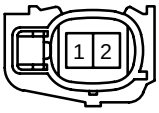

I 9



I10

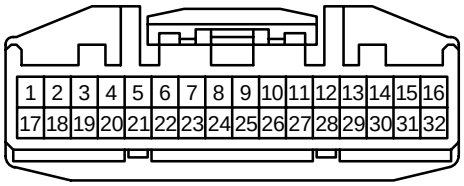

I11
Black



I12
Orange



I13
Orange

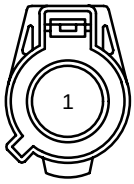

I14
Orange

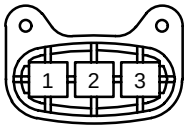

I15
Orange

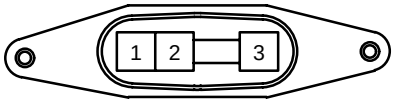

I16



I17



I18

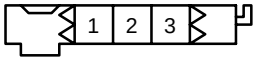

J 1

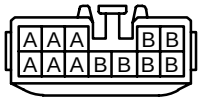

J 2



J 3



J 4

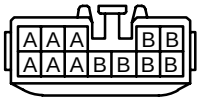

J 5

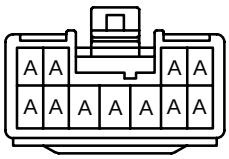

J 6

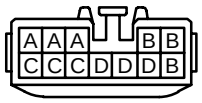

J 7

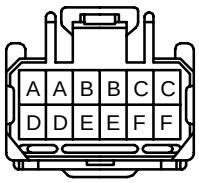

J 8

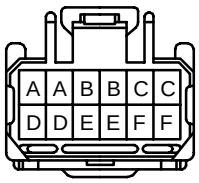

J 9

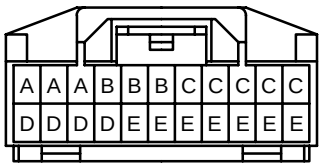

J10

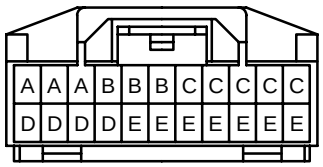

J11

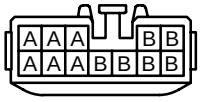

J12

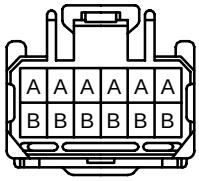

K CONNECTOR LIST

J13

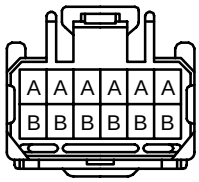

J14

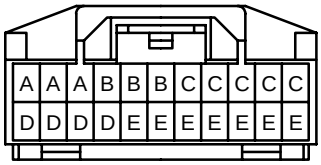

J15

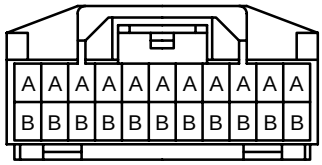

J16



J17



J18

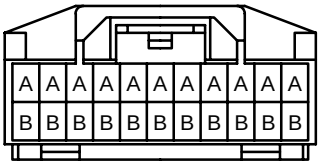

J19

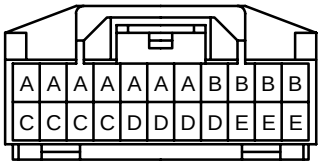

J20

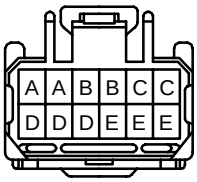

J21

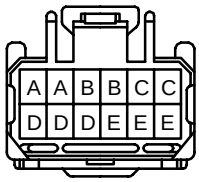

J22

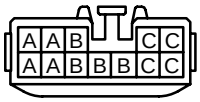

J23



J24



J25



J26

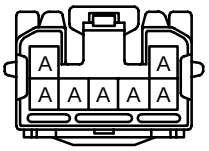

J27

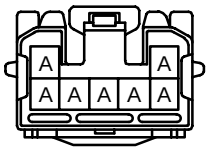

J30



J31

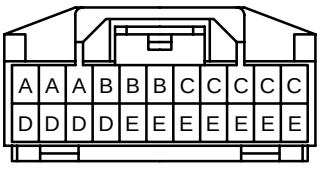

J32



J33

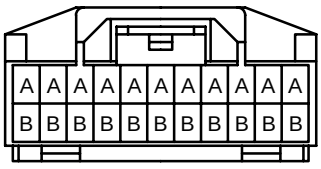

J34



J35

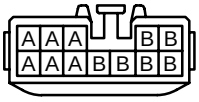

K 1
Black

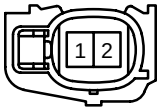

K 2

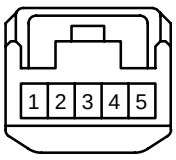

K 3
Black

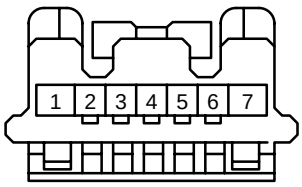

L 1
Gray



L 2
Gray



L 3

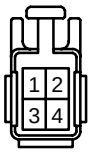

L 4

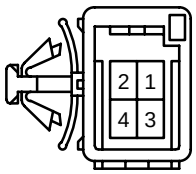

L 5

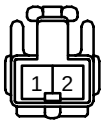

L 6

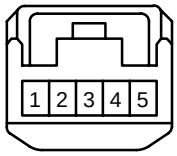

L 7

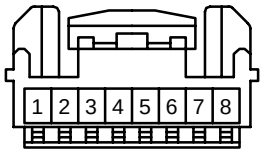

M 1
Black

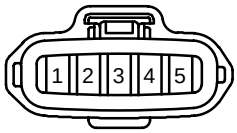

M 2
Black



M 3
Black



M 4
Black



M 5
Gray



M 6
Black



M 7
Black



M 8
Black



M 9
Gray



M10
Black



M11
Black

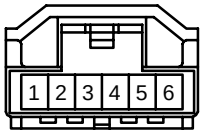

M12

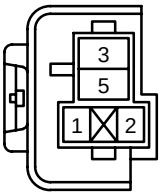

M13

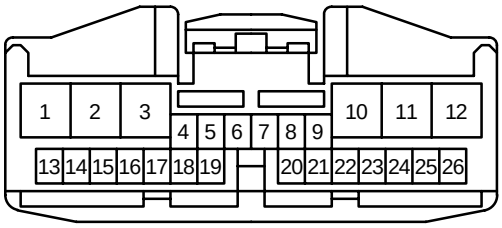

M14

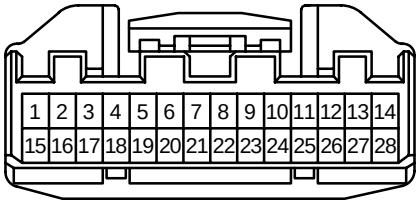

N 1
Gray



N 2

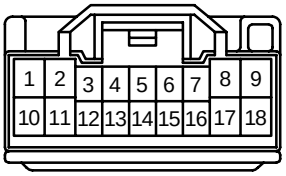

N 3

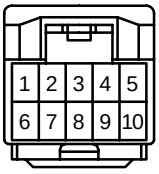

N 4
Black

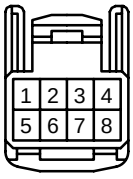

N 5

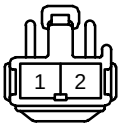

N 6
Black

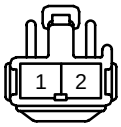

N 7

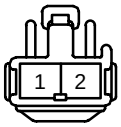

O 1
Gray



O 2



K CONNECTOR LIST

O 3

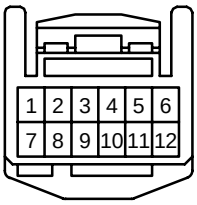

P 1
Dark Gray

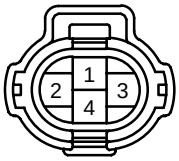

P 2



P 3



P 4



P 5

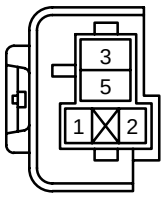

P 6

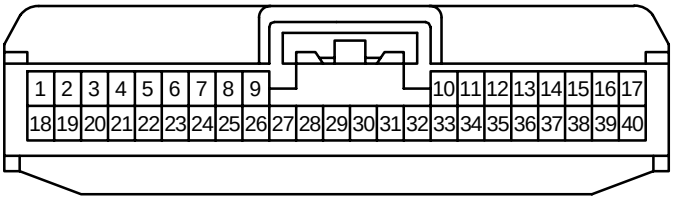

P 7
Gray

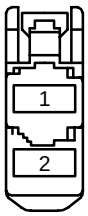

P 8

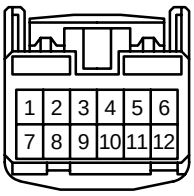

P 9

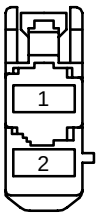

P10

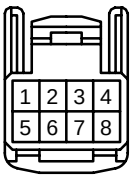

P11
Black

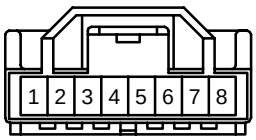

P12

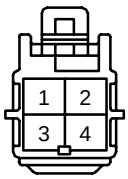

P13

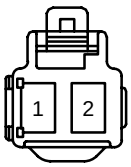

P14

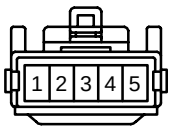

P15

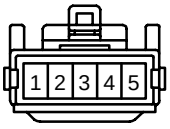

P16

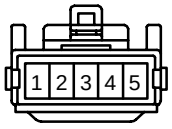

P17

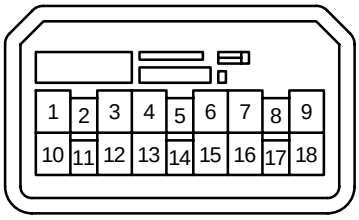

P18
Black

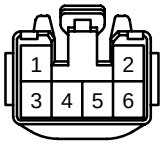

P19
Black

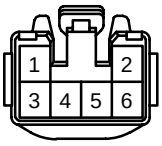

P20
Black

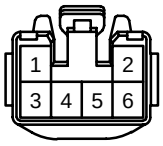

P21
Black

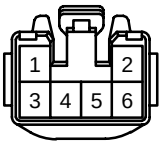

P22
Yellow

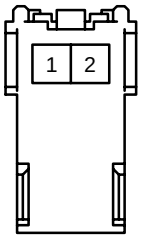

P23
Yellow

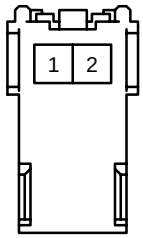

R 1
Gray

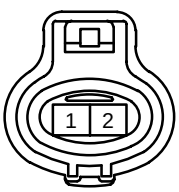

R 2
Black

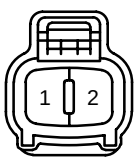

R 3

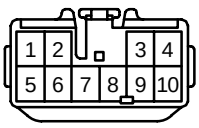

R 4



R 5

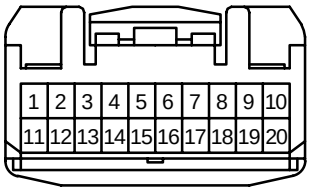

R 6

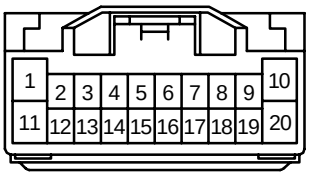

R 7
Black

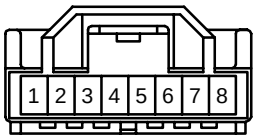

R 8

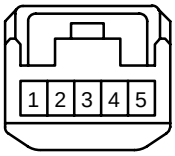

R 9

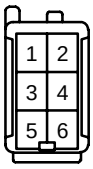

R10

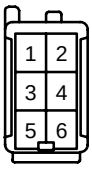

R11



R12



R13



R14



R15



R16



R17

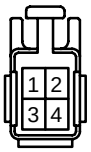

R18

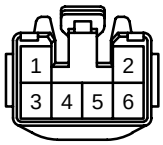

R19

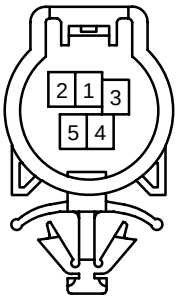

R20

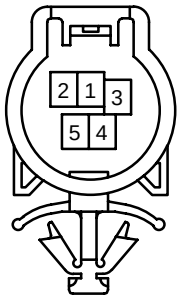

R21

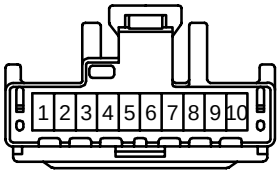

S 1
Black

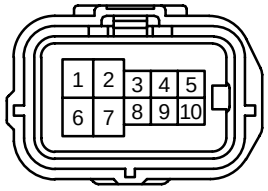

S 2
Gray



S 3
Gray



S 4

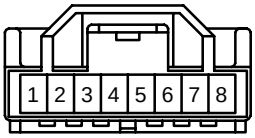

S 5
Black

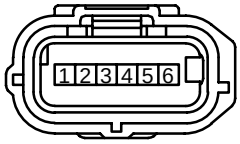

S 6
Black

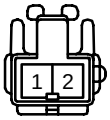

S 7

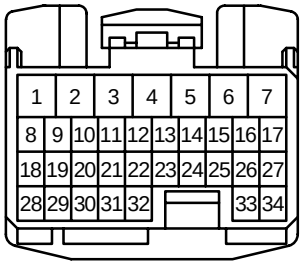

K CONNECTOR LIST

S 8

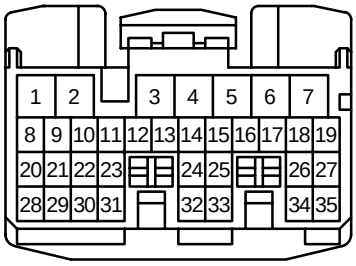

S 9

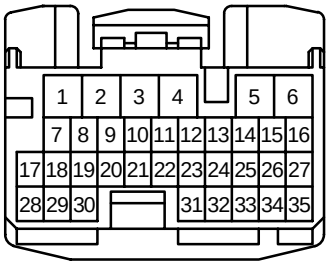

S10

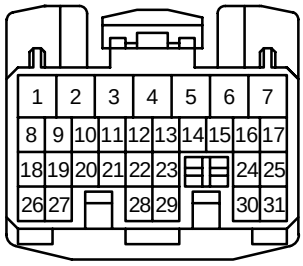

S11

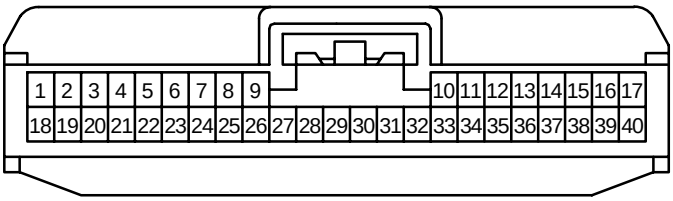

S12

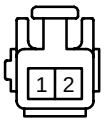

S13
Gray

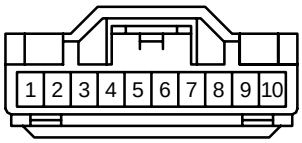

S14

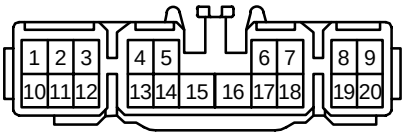

S15

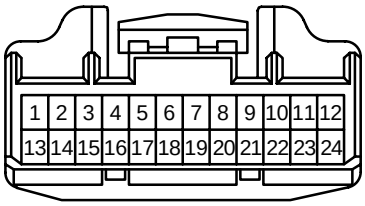

S16
Black

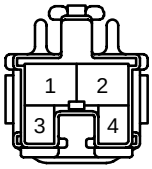

S17



S18
Yellow

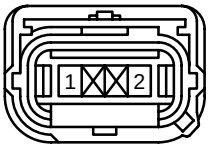

S19
Yellow

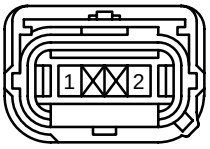

S20

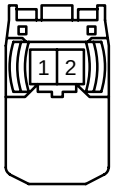

S21

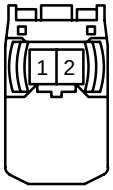

S22

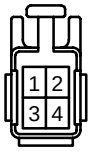

S23

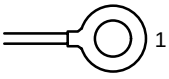

S24

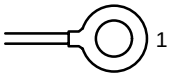

S25

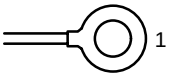

S26

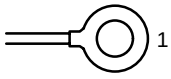

S27
Black



S28
Black



T 1
Black

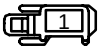

T 2
Gray



T 3
Black



T 4

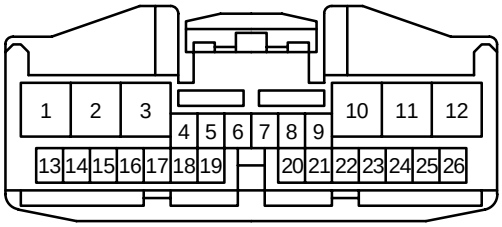

T 5

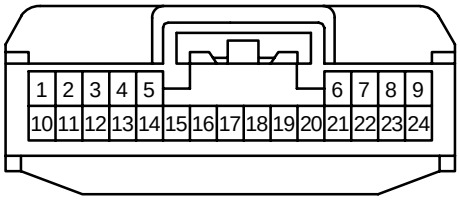

T 6

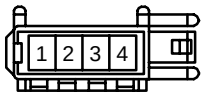

T 7

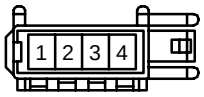

T 8

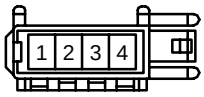

T 9

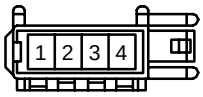

V 1
Black

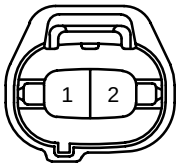

V 2



V 3



V 4

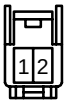

V 5

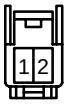

V 6
Black



V 7
Black

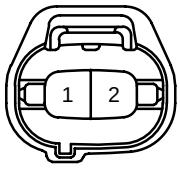

V 8
Blue



W 1
Black



W 3
Black



W 4
Gray



W 5



W 6
Black



Y 1
Black

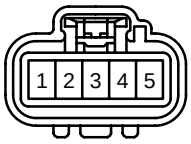

L PART NUMBER OF CONNECTORS

Code	Part Name	Part Number
A 1	A/C Condenser Fan Motor	90980-10928
A 2	ABS & BA & TRAC & VSC Actuator	90980-12297
A 3	ABS Speed Sensor Front LH	90980-11003
A 4	ABS Speed Sensor Front RH	
A 5	Air Fuel Ratio Sensor (Bank 1 Sensor 1)	90980-10869
A 6	Ambient Temp. Sensor	90980-11070
A 7	A/C Control Assembly	90980-12150
A 8	A/C Control Assembly	90980-12149
A 9	A/C Room Temp. Sensor	90980-11950
A10	A/C Solar Sensor	90980-11918
A11	A/C Thermistor	
A12	ACC Relay	82660-20340
A13	Accel Position Sensor	90980-11858
A14	Air Inlet Control Servo Motor	90980-11909
A15	Air Mix Control Servo Motor	
A16	Air Vent Mode Control Servo Motor	
A17	Airbag Sensor Assembly	90980-12392
A18	Airbag Sensor Assembly	90980-12391
A19	Airbag Sensor Assembly	90980-12390
A20	Airbag Squib (Front Passenger Airbag Assembly No.1)	90980-12224
A21	Airbag Squib (Front Passenger Airbag Assembly No.2)	90980-12219
A22	Airbag Squib (Steering Wheel Pad)	90980-12160
A23	Antenna Amplifier	90980-10871
A24	Automatic Light Control Sensor	90980-11107
A25	ABS Speed Sensor Rear LH	90980-11900
A26	ABS Speed Sensor Rear RH	
B 1	Brake Fluid Level Warning SW	90980-11207
B 2	Blower Motor	90980-10214
B 3	Blower Motor Controller	90980-11667
B 4	Blower Motor Controller	90980-11579
B 5	Body ECU	90980-12458
B 6	Body ECU	90980-12329
B 7	Body ECU	90980-12150
B 8	Brake Pedal Stroke Sensor	90980-11150
B 9	Battery Blower Motor	90980-10916
B10	Battery Blower Motor Controller	90980-11676
B11	Battery ECU	90980-12203
B12	Battery ECU	90980-11915
B13	Battery ECU	90980-12155
B14	Battery Fan Relay	82660-20340
B15	Buckle SW Front LH	90980-11918
B16	Buckle SW Front RH	90980-10908
B17	Brake Master Stroke Simulator Cylinder Assembly	90980-11003
B18	Brake Control Power Supply	82824-50190

Code	Part Name	Part Number
B19	Brake Actuator Resistor	82610-20080
C 1	Camshaft Position Sensor	90980-10947
C 2	Camshaft Timing Oil Control Valve	90980-11162
C 3	Circuit Breaker Sensor	90980-11898
C 4	Compressor Assembly (Motor)	6189-1164
C 5	Converter	90980-11034
C 6	Converter	90980-11963
C 7	Crankshaft Position Sensor	90980-12028
C 8	Center Speaker	90980-10860
C 9	Clock	90980-11013
C10	Combination Meter	90980-12153
C11	Combination SW	90980-12266
C12	Combination SW	90980-12265
C13	Combination SW	90980-12358
C14	Combination SW	90980-12359
C15	Curtain Shield Airbag Sensor LH	90980-12241
C16	Curtain Shield Airbag Sensor RH	
C17	Curtain Shield Airbag Squib LH	90980-12219
C18	Curtain Shield Airbag Squib RH	
C19	Coolant Heat Storage Tank Outlet Temp. Sensor	90980-11061
C20	Coolant Heat Storage Water Pump	90980-11156
D 1	Data Link Connector 3	90980-11665
D 2	Daytime Running Light Relay	90980-12034
D 3	Diode (Daytime Running Light)	90980-10962
D 4	Door Control Receiver	90980-12366
D 5	Door Courtesy Light Front LH	90980-11148
D 6	Door Courtesy Light Front RH	
D 7	Door Courtesy SW Front LH	90980-10871
D 8	Door Courtesy SW Front RH	
D 9	Door Courtesy SW Rear LH	
D10	Door Courtesy SW Rear RH	
D11	Door Lock Control SW Front RH	90980-10797
D12	Door Lock Motor Front LH	90980-12226
	Door Unlock Detection SW Front LH	
D13	Door Lock Motor Front RH	
	Door Unlock Detection SW Front RH	
D14	Door Lock Motor Rear LH	
	Door Unlock Detection SW Rear LH	
D15	Door Lock Motor Rear RH	
	Door Unlock Detection SW Rear RH	
D16	Door Oscillator Front LH (w/ Sensor)	90980-12217
D17	Door Oscillator Front RH (w/ Sensor)	
D18	Diode (Rear Wiper)	90980-10962
E 1	Engine Coolant Temp. Sensor	90980-10735
E 3	Engine Hood Courtesy SW	90980-11003

Note: Not all of the above part numbers of the connector are established for the supply.

Code	Part Name	Part Number
E 4	Engine Control Module	90980-12144
E 5	Engine Control Module	90980-12145
E 6	Engine Control Module	90980-12142
E 7	Engine Control Module	90980-12146
E 8	Electrical Key Antenna (Driver's Side)	90980-12382
E 9	Electrical Key Antenna (Front Passenger's Side)	
E10	Electrical Key Antenna (Luggage Compartment Door)	90980-10824
F 1	Front Airbag Sensor LH	90980-11856
F 2	Front Airbag Sensor RH	
F 3	Front Fog Light LH	90980-11096
F 4	Front Fog Light RH	
F 5	Front Side Marker Light LH	90980-11156
F 6	Front Side Marker Light RH	
F 7	Front Turn Signal Light LH	90980-11019
F 8	Front Turn Signal Light RH	
F 9	Front Washer Motor	
F10	Front Wiper Motor	90980-11599
F11	Front Passenger Seat Belt Warning Light	90980-12012
F12	Front Door Speaker LH	90980-10935
F13	Front Door Speaker RH	
F14	Fuel Pump	82824-47160
	Fuel Sender	
F15	Fusible Link Block	90980-11775
F16	Fusible Link Block	90980-10916
G 1	Gateway ECU	90980-12404
G 2	Glove Box Light	90980-11918
G 3	Garage Door Opener	82824-47180
	Inner Mirror	
H 1	Headlight Beam Level Control Actuator LH	90980-11016
H 2	Headlight Beam Level Control Actuator RH	
H 3	Headlight Assembly LH	90980-11255
H 4	Headlight Assembly LH	90980-10869
H 5	Headlight Assembly RH	90980-11255
H 6	Headlight Assembly RH	90980-10869
H 7	Headlight LH	90980-11314
H 8	Headlight RH	
H 9	Horn (High)	90980-10619
H10	Horn (Low)	
H11	Hazard SW	90980-12091
	ODO/TRIP SW	
H12	Headlight Beam Level Control ECU	90980-12200
H13	Heated Oxygen Sensor (Bank 1 Sensor 2)	90980-11028
H14	Hybrid Vehicle Control ECU	90980-12431
H15	Hybrid Vehicle Control ECU	90980-12429
H16	Hybrid Vehicle Control ECU	90980-12428

Code	Part Name	Part Number
H17	Hybrid Vehicle Control ECU	90980-12430
H18	Height Control Sensor	90980-11860
H19	High Mounted Stop Light	90980-11967
H20	Hybrid Vehicle Battery	82675-47060
H21	Hybrid Vehicle Battery	82675-47070
I 1	Ignition Coil and Igniter No.1	90980-11885
I 2	Ignition Coil and Igniter No.2	
I 3	Ignition Coil and Igniter No.3	
I 4	Ignition Coil and Igniter No.4	
I 5	Injector No.1	90980-11875
I 6	Injector No.2	
I 7	Injector No.3	
I 8	Injector No.4	
I 9	Inverter	90980-11148
I10	Inverter	90980-12153
I11	Inverter	90980-10988
I12	Inverter	90980-12465
I13	Inverter	90980-12464
I14	Inverter	90980-12434
I15	Inverter	90980-12433
I16	Inverter	90980-11147
I17	Inter Lock SW	90980-11918
I18	Interior Light	81366-68010
J 1	Junction Connector	90980-10803
J 2	Junction Connector	
J 3	Junction Connector	
J 4	Junction Connector	
J 5	Junction Connector	90980-10830
J 6	Junction Connector	90980-10803
J 7	Junction Connector	90980-11661
J 8	Junction Connector	
J 9	Junction Connector	90980-11915
J10	Junction Connector	
J11	Junction Connector	90980-10803
J12	Junction Connector	90980-11661
J13	Junction Connector	
J14	Junction Connector	90980-11915
J15	Junction Connector	
J16	Junction Connector	90980-10803
J17	Junction Connector	
J18	Junction Connector	90980-11915
J19	Junction Connector	
J20	Junction Connector	90980-11661
J21	Junction Connector	

L PART NUMBER OF CONNECTORS

Code	Part Name	Part Number
J22	Junction Connector	90980-10803
J23	Junction Connector	
J24	Junction Connector	
J25	Junction Connector	
J26	Junction Connector	90980-11529
J27	Junction Connector	
J30	Junction Connector	90980-10803
J31	Junction Connector	90980-11915
J32	Junction Connector	90980-10803
J33	Junction Connector	90980-11915
J34	Junction Connector	90980-10799
J35	Junction Connector	90980-10803
K 1	Knock Sensor (Bank 1)	90980-11875
K 2	Key Slot	90980-12366
K 3	Key Slot	90980-12092
L 1	License Plate Light LH	90980-11148
L 2	License Plate Light RH	
L 3	Luggage Compartment Courtesy SW	90980-10795
	Luggage Compartment Door Opener Motor	
L 4	Luggage Compartment Door Lock SW	90980-12212
	Luggage Compartment Door Opener SW	
L 5	Luggage Compartment Light	90980-10860
L 6	Luggage Oscillator (Inner)	90980-12366
L 7	Luggage Oscillator (Outer)	90980-12217
M 1	Mass Air Flow Meter	90980-11317
M 2	Motor Generator No.1	90980-12432
M 3	Motor Generator No.1	
M 4	Motor Generator No.1	
M 5	Motor Generator No.1	90980-11034
M 6	Motor Generator No.2	90980-12432
M 7	Motor Generator No.2	
M 8	Motor Generator No.2	
M 9	Motor Generator No.2	90980-11034
M10	Motor Generator No.2	
M11	Main SW	90980-11986
M12	Mirror Heater Relay	82660-20340
M13	Multi-Display	90980-12203
M14	Multi-Display	90980-12410
N 1	Noise Filter (Ignition)	90980-10843
N 2	Navigation ECU	90980-11973
N 3	Navigation ECU	90980-11923
N 4	Navigation ECU	90980-12221
N 5	Noise Filter (High Mounted Stop Light)	90980-10916
N 6	Noise Filter (Rear Window Defogger)	
N 7	Noise Filter (Rear Window Defogger)	
O 1	Oil Pressure SW	90980-11363
O 2	Option Connector (Glass Breakage Sensor)	90980-10908
O 3	Overhead J/B	90980-12183
P 1	Pressure SW	90980-10943
P 2	Parking Brake SW	90980-10871
P 3	Power Outlet No.1	90980-10760
P 4	Power Outlet No.2	
P 5	Power Outlet Relay	82660-20340
P 6	Power Source Control ECU	90980-12388
P 7	Power Steering ECU	90980-12300
P 8	Power Steering ECU	90980-12290
P 9	Power Steering Motor	90980-12299
P10	Power Steering Torque Sensor	90980-12221
P11	Power SW	90980-11989
P12	PTC Heater	90980-11136
P13	PTC Heater	90980-10903
P14	Power Window Control SW Front RH	90980-10789
P15	Power Window Control SW Rear LH	
P16	Power Window Control SW Rear RH	
P17	Power Window Master SW	90980-12122
P18	Power Window Motor Front LH	90980-10797
P19	Power Window Motor Front RH	
P20	Power Window Motor Rear LH	
P21	Power Window Motor Rear RH	
P22	Pretensioner LH	90980-12253
P23	Pretensioner RH	
R 1	Radiator Fan Motor	90980-10928
R 2	Rear Washer Motor	90980-11051
R 3	Radio and Player	90980-10997
R 4	Radio and Player	90980-10996
R 5	Radio and Player	90980-12259
R 6	Radio and Player	90980-12038
R 7	Rheostat	90980-11989
R 8	Room Oscillator	90980-12366
R 9	Rear Combination Light LH	90980-11011
R10	Rear Combination Light RH	
R11	Rear Door Speaker LH	90980-10935
R12	Rear Door Speaker RH	
R13	Rear Window Defogger	90980-10914
R14	Rear Window Defogger	90980-10913
R15	Rear Window Defogger	90980-10914
R16	Rear Window Defogger	90980-10913
R17	Rear Wiper Motor	90980-10795
R18	Rear Wiper Relay	90980-10797

Note: Not all of the above part numbers of the connector are established for the supply.

Code	Part Name	Part Number
R19	Mirror Heater LH	90980-12189
	Remote Control Mirror LH	
R20	Mirror Heater RH	
	Remote Control Mirror RH	
R21	Remote Control Mirror SW	90980-11657
S 1	Shift Control Actuator	90980-12446
S 2	Short Connector	90980-11002
S 3	Short Connector	90980-11003
S 4	Shift Lever Position Sensor	90980-11989
S 5	Shift Lever Position Sensor	90980-12303
S 6	Skid Control Buzzer	90980-10906
S 7	Skid Control ECU	90980-12144
S 8	Skid Control ECU	90980-12145
S 9	Skid Control ECU	90980-12146
S10	Skid Control ECU	90980-12142
S11	Smart Key ECU	90980-12388
S12	Smart Key System Cancel SW	90980-10825
S13	Steering Sensor	90980-12162
S14	Stereo Component Amplifier	90980-10821
S15	Stereo Component Amplifier	90980-12200
S16	Stop Light SW	90980-11118
S17	Seat Position Airbag Sensor	90980-10942
S18	Side Airbag Sensor LH	90980-12241
S19	Side Airbag Sensor RH	
S20	Side Airbag Squib LH	90980-12452
S21	Side Airbag Squib RH	
S22	System Main Relay	90980-10795
S23	System Main Relay	90980-09938
S24	System Main Relay	

Code	Part Name	Part Number
S25	System Main Relay	82675-28380
S26	System Main Relay	
S27	Short Connector (Water Pump)	90980-11162
S28	Short Connector (Water Pump)	90980-11168
T 1	Theft Deterrent Horn	90980-10619
T 2	Throttle Control Motor	90980-11162
T 3	Throttle Position Sensor	90980-10711
T 4	Transmission Control ECU	90980-12203
T 5	Transponder Key Computer	90980-12404
T 6	Tweeter Front LH	90980-12304
T 7	Tweeter Front RH	
T 8	Tweeter Rear LH	
T 9	Tweeter Rear RH	
V 1	VSV (EVAP)	90980-11156
V 2	Vanity Light LH	90980-10935
V 3	Vanity Light RH	
V 4	Vanity Light SW LH	90980-11918
V 5	Vanity Light SW RH	
V 6	Vapor Pressure Sensor	90980-11143
V 7	VSV (Canister Closed Valve)	90980-11156
V 8	VSV (Parge Flow Switching Valve)	90980-11859
W 1	Water Pump Motor (A/C)	90980-10887
W 3	Water Pump Motor (Inverter)	90980-11162
W 4	Water Temp. SW	90980-11235
W 5	Water Valve	90980-10988
W 6	Wireless Door Lock Buzzer	90980-11142
Y 1	Yaw Rate Sensor	90980-11904

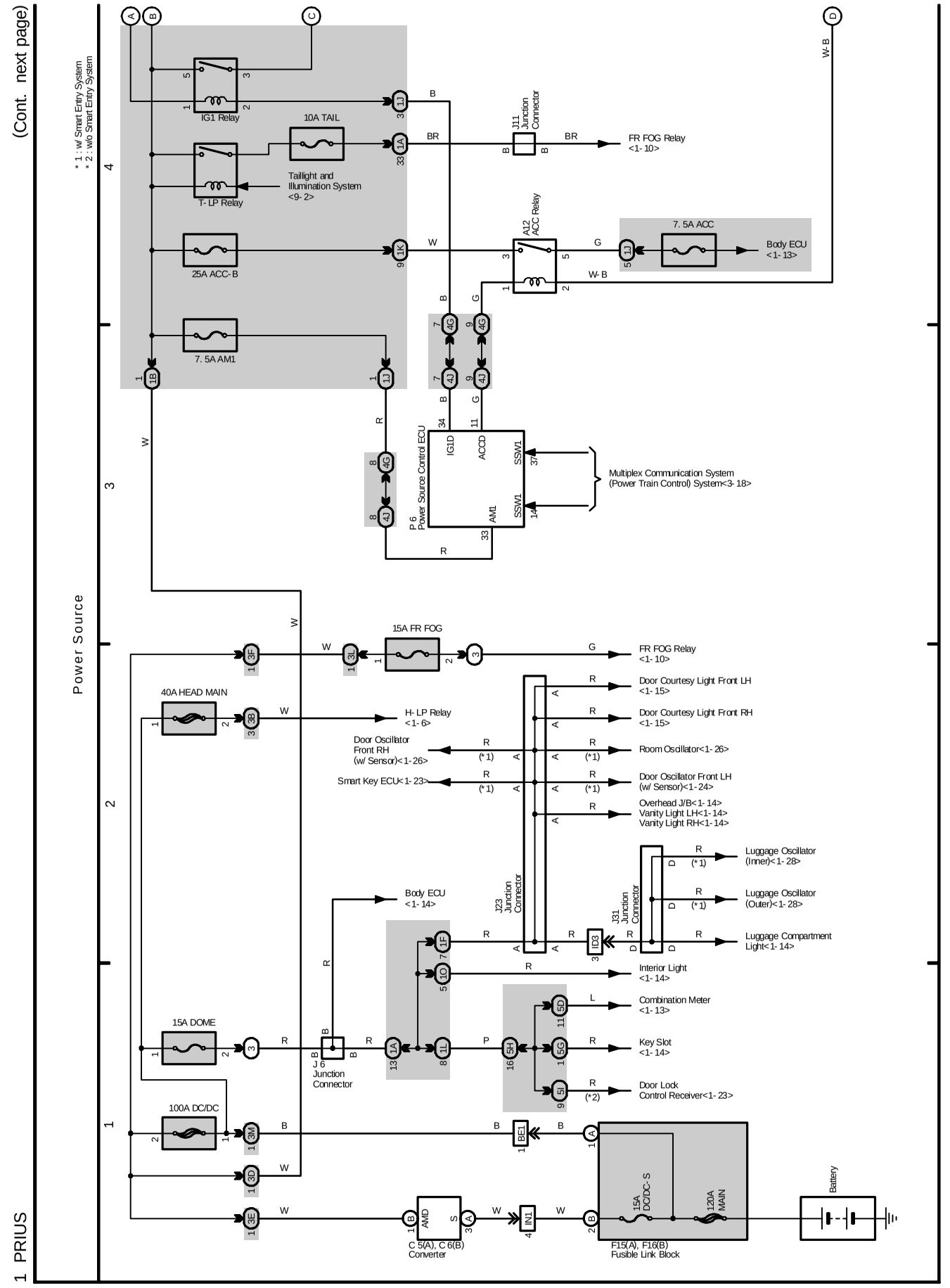
(Cont. next page)
* 1 : w/ Smart Entry System
* 2 : w/o Smart Entry System
Power Source
IG1 Relay
10A TAIL
T- LP Relay
Taillight and Illumination System <9- 2>
25A ACC- B
7. 5A AM1
J11 Junction Connector
FR FOG Relay <1- 10>
A12 ACC Relay
7. 5A ACC
Body ECU <1- 13>
W- B
P 6 Power Source Control ECU
IG1D
ACCD
SSW1
AM1
Multiplex Communication System (Power Train Control) System<3- 18>
15A FR FOG
40A HEAD MAIN
H- LP Relay <1- 6>
Door Oscillator Front RH (w/ Sensor)<1- 26>
Smart Key ECU<1- 23>
Door Courtesy Light Front LH <1- 15>
Door Courtesy Light Front RH <1- 15>
Room Oscillator<1- 26>
Door Oscillator Front LH (w/ Sensor)<1- 24>
Overhead J/B<1- 14>
Vanity Light LH<1- 14>
Vanity Light RH<1- 14>
J23 Junction Connector
J31 Junction Connector
Luggage Oscillator (Inner)<1- 28>
Luggage Oscillator (Outer)<1- 28>
Luggage Compartment Light<1- 14>
Body ECU <1- 14>
Interior Light <1- 14>
Combination Meter <1- 13>
Key Slot <1- 14>
Door Lock Control Receiver<1- 23>
15A DOME
J 6 Junction Connector
100A DC/DC
AMD
C 5(A), C 6(B) Converter
15A DC/DC- S
120A MAIN
Battery
F15(A), F16(B) Fusible Link Block

M OVERALL ELECTRICAL WIRING DIAGRAM

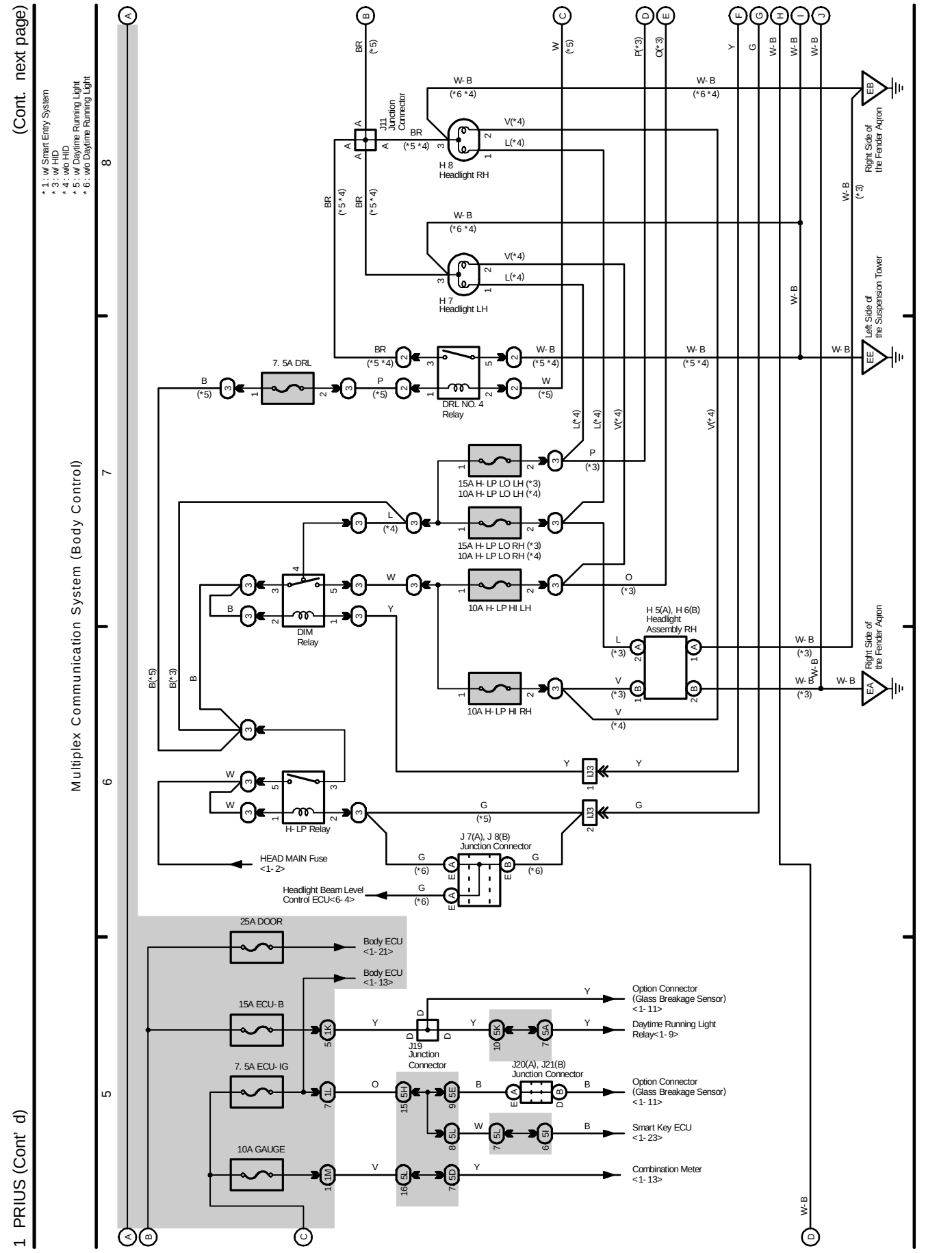

(Cont. next page)

Multiplex Communication System (Body Control)

* 3 : w/ HID
* 5 : w/ Daytime Running Light

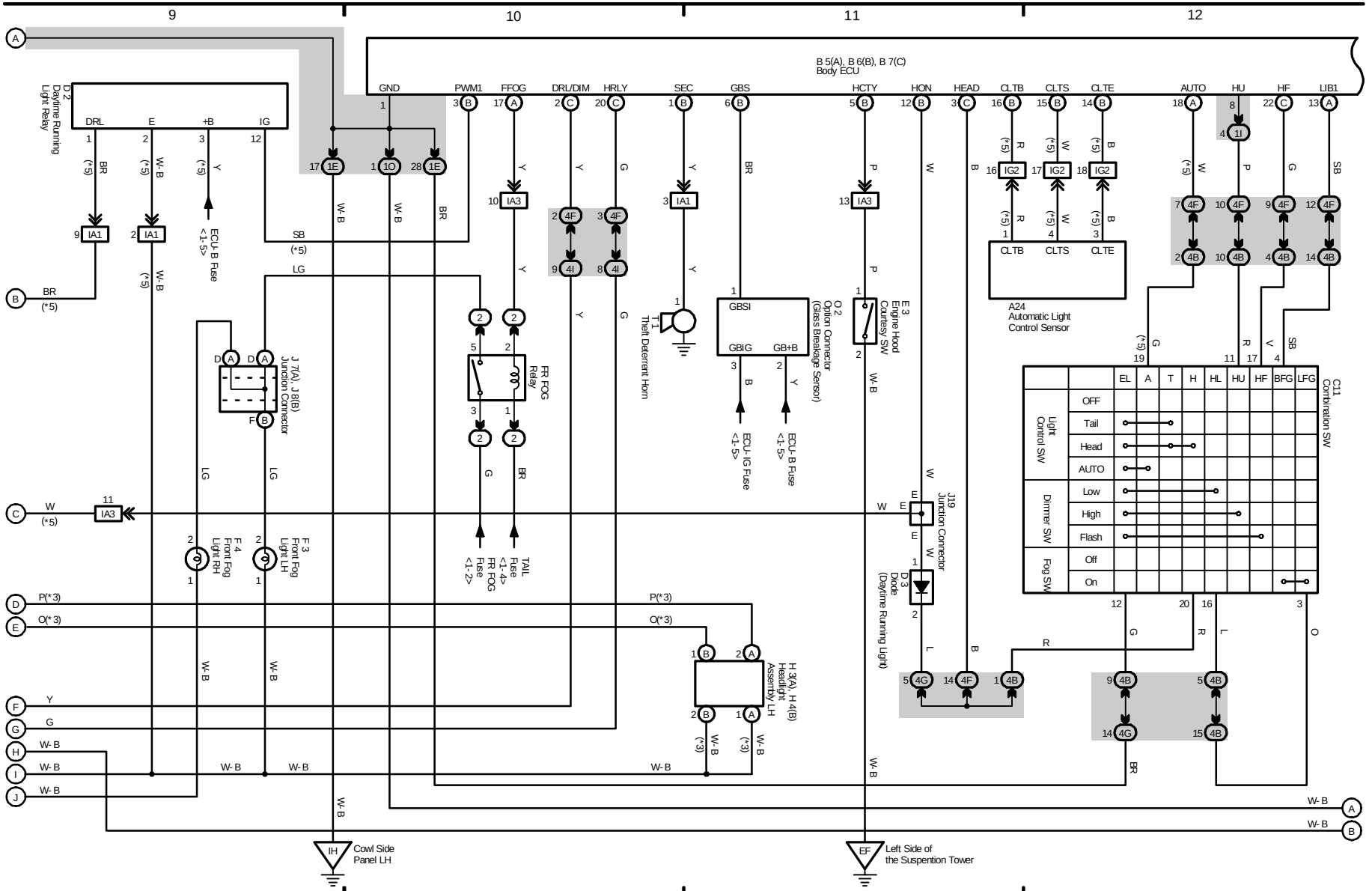

M OVERALL ELECTRICAL WIRING DIAGRAM

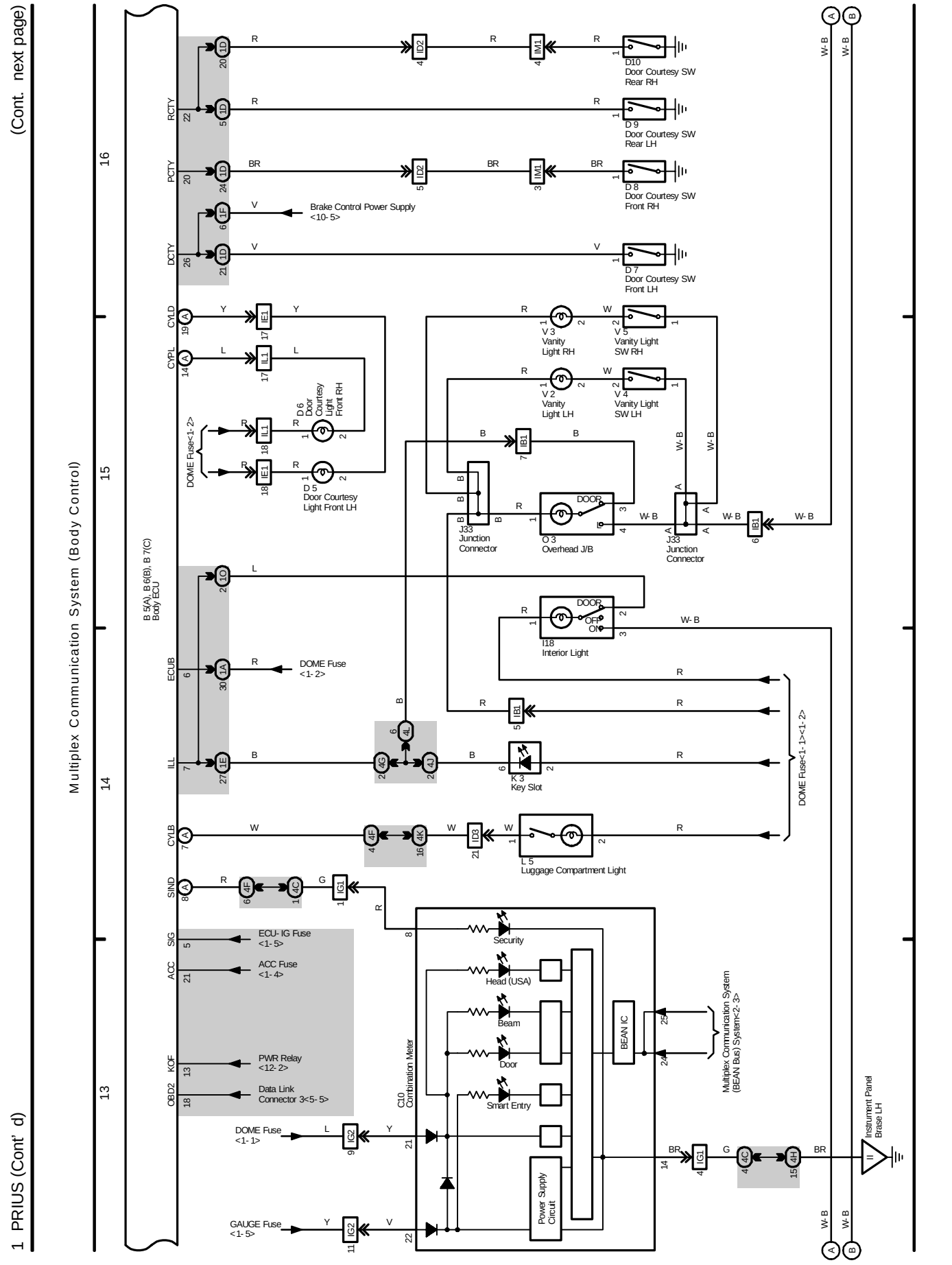

(Cont. next page)

Multiplex Communication System (Body Control)

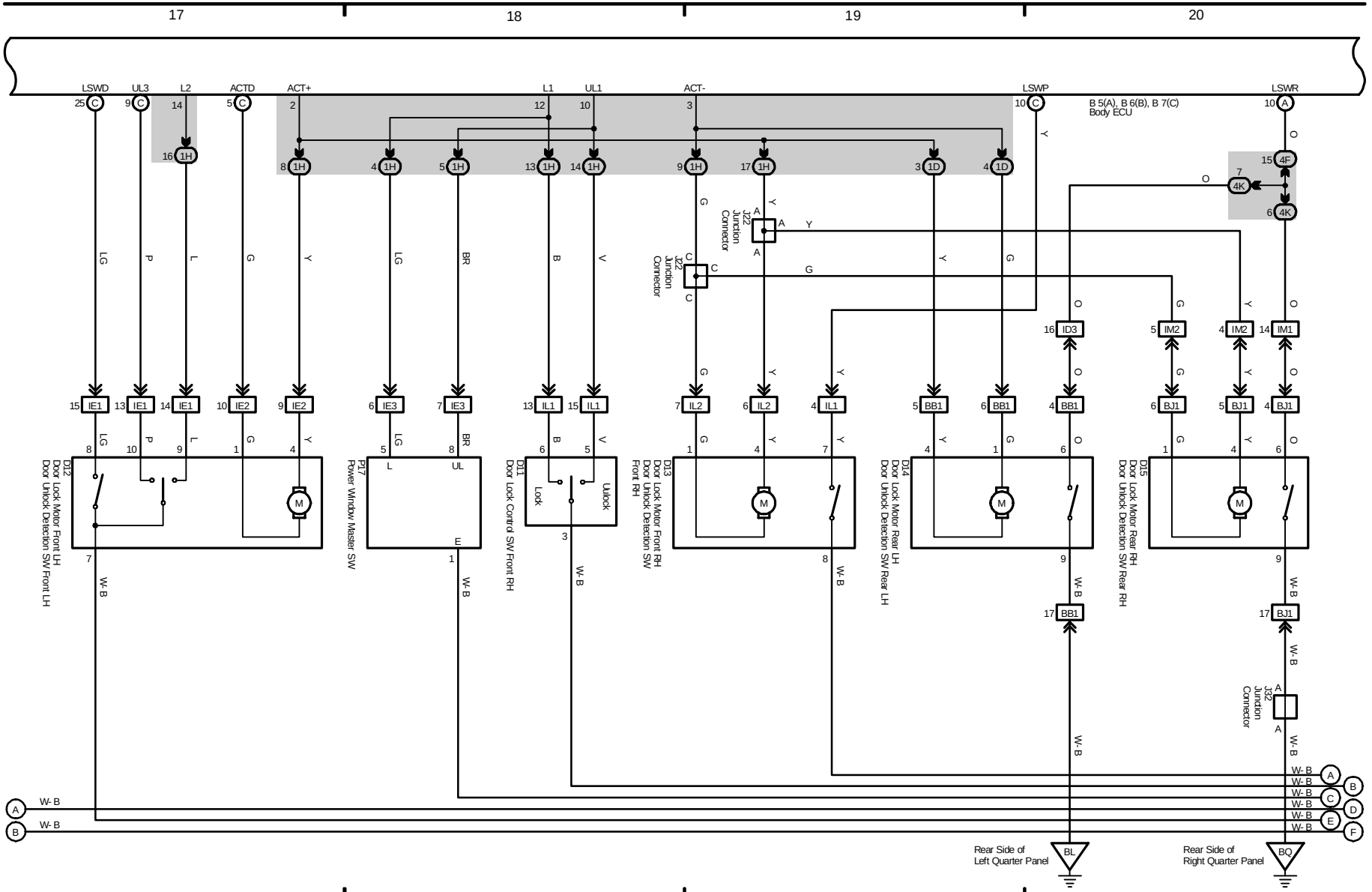

M OVERALL ELECTRICAL WIRING DIAGRAM

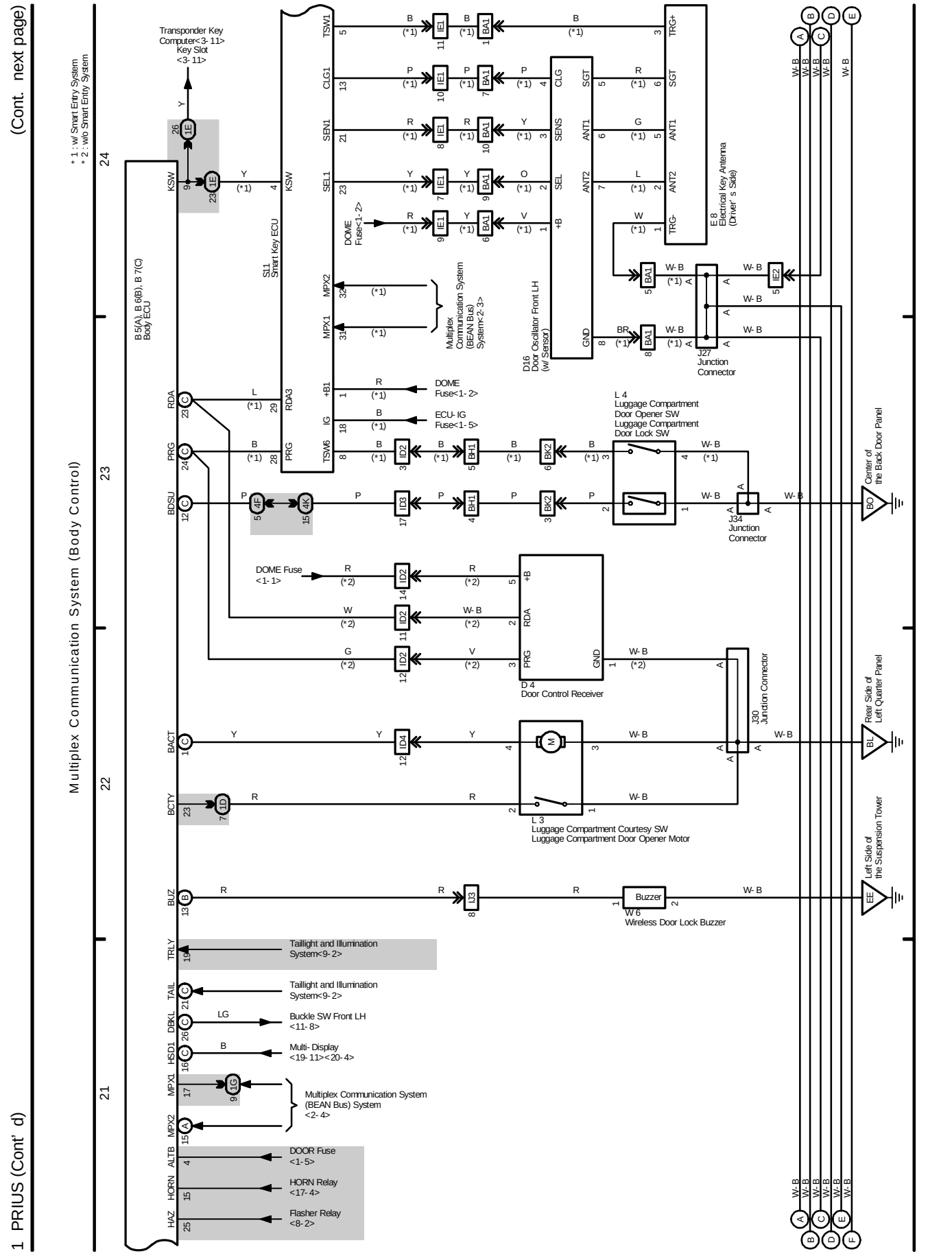

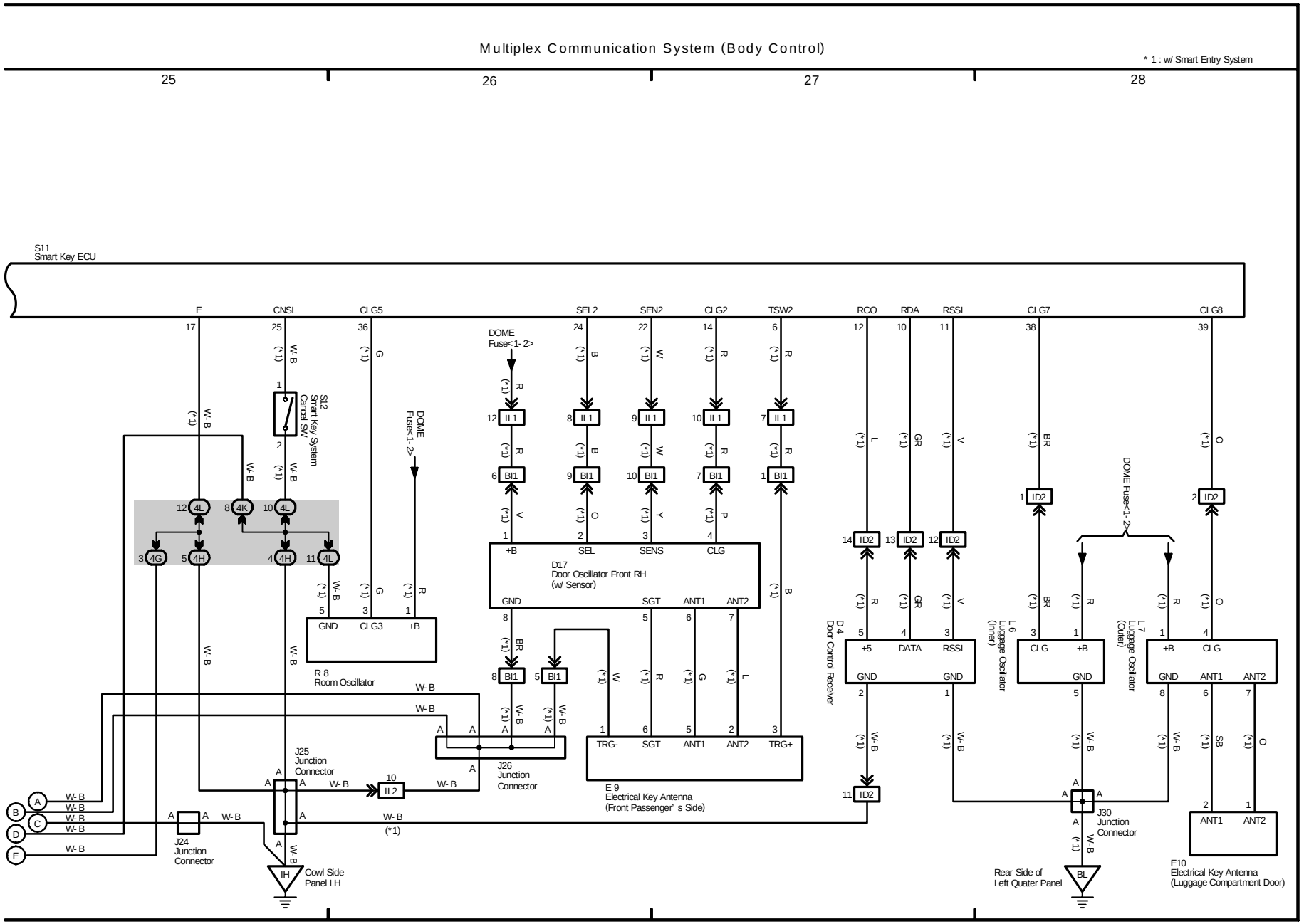
Multiplex Communication System (Body Control)
* 1 : w/ Smart Entry System
25
26
27
28
S11
Smart Key ECU
E
CNSL
CLG5
SEL2
SEN2
CLG2
TSW2
RCO
RDA
RSSI
CLG7
CLG8
S12
Smart Key System
Cancel SW
DOME
Fuse<1- 2>
D17
Door Oscillator Front RH
(w/ Sensor)
+B
SEL
SENS
CLG
GND
SGT
ANT1
ANT2
R 8
Room Oscillator
GND
CLG3
+B
D4
Door Control Receiver
+5
DATA
RSSI
L6
Luggage Oscillator
(Inner)
L7
Luggage Oscillator
(Outer)
CLG
J25
Junction
Connector
J26
Junction
Connector
J24
Junction
Connector
J30
Junction
Connector
E 9
Electrical Key Antenna
(Front Passenger' s Side)
E10
Electrical Key Antenna
(Luggage Compartment Door)
Cowl Side
Panel LH
Rear Side of
Left Quater Panel
W- B

M OVERALL ELECTRICAL WIRING DIAGRAM

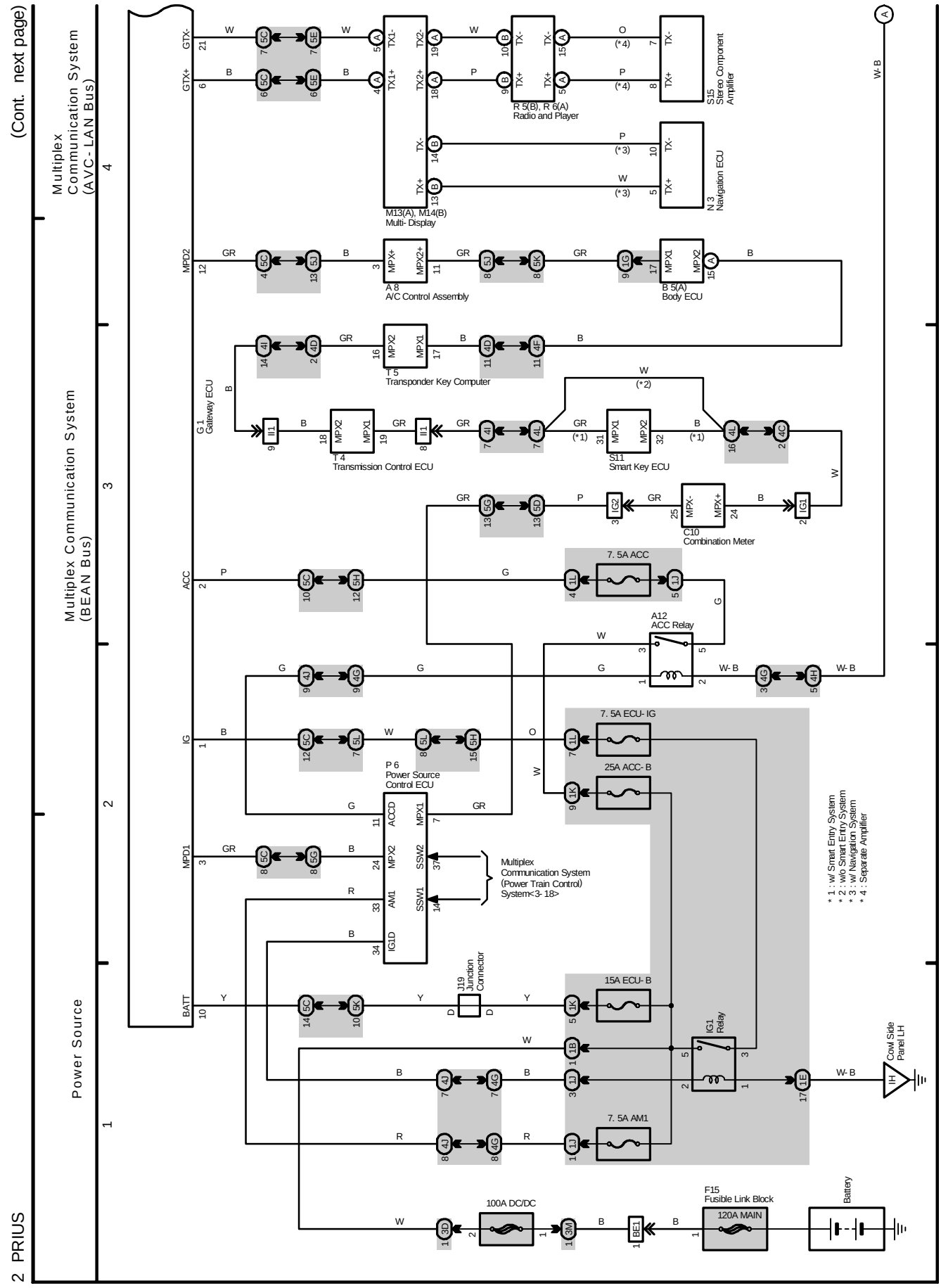

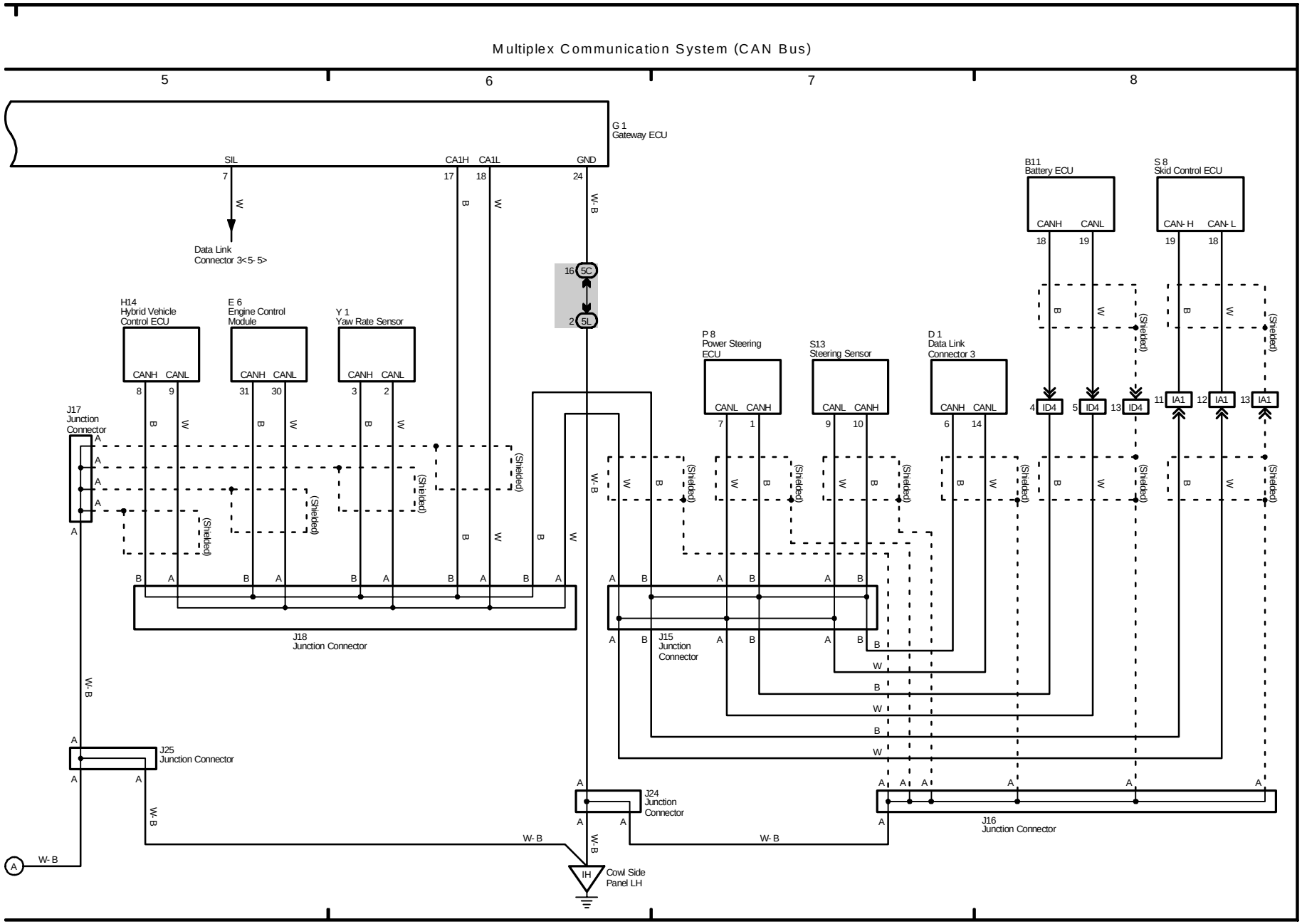
Multiplex Communication System (CAN Bus)
5
6
7
8
G 1
Gateway ECU
SIL
CA1H
CA1L
GND
Data Link
Connector 3<5- 5>
16 5C
2 5L
H14
Hybrid Vehicle
Control ECU
E 6
Engine Control
Module
Y 1
Yaw Rate Sensor
CANH CANL
P 8
Power Steering
ECU
S13
Steering Sensor
D 1
Data Link
Connector 3
B11
Battery ECU
S 8
Skid Control ECU
CAN- H
CAN- L
ID4
IA1
(Shielded)
J17
Junction
Connector
J18
Junction Connector
J15
Junction
Connector
J25
Junction Connector
J24
Junction
Connector
J16
Junction Connector
W- B
Cowl Side
Panel LH
IH

M OVERALL ELECTRICAL WIRING DIAGRAM

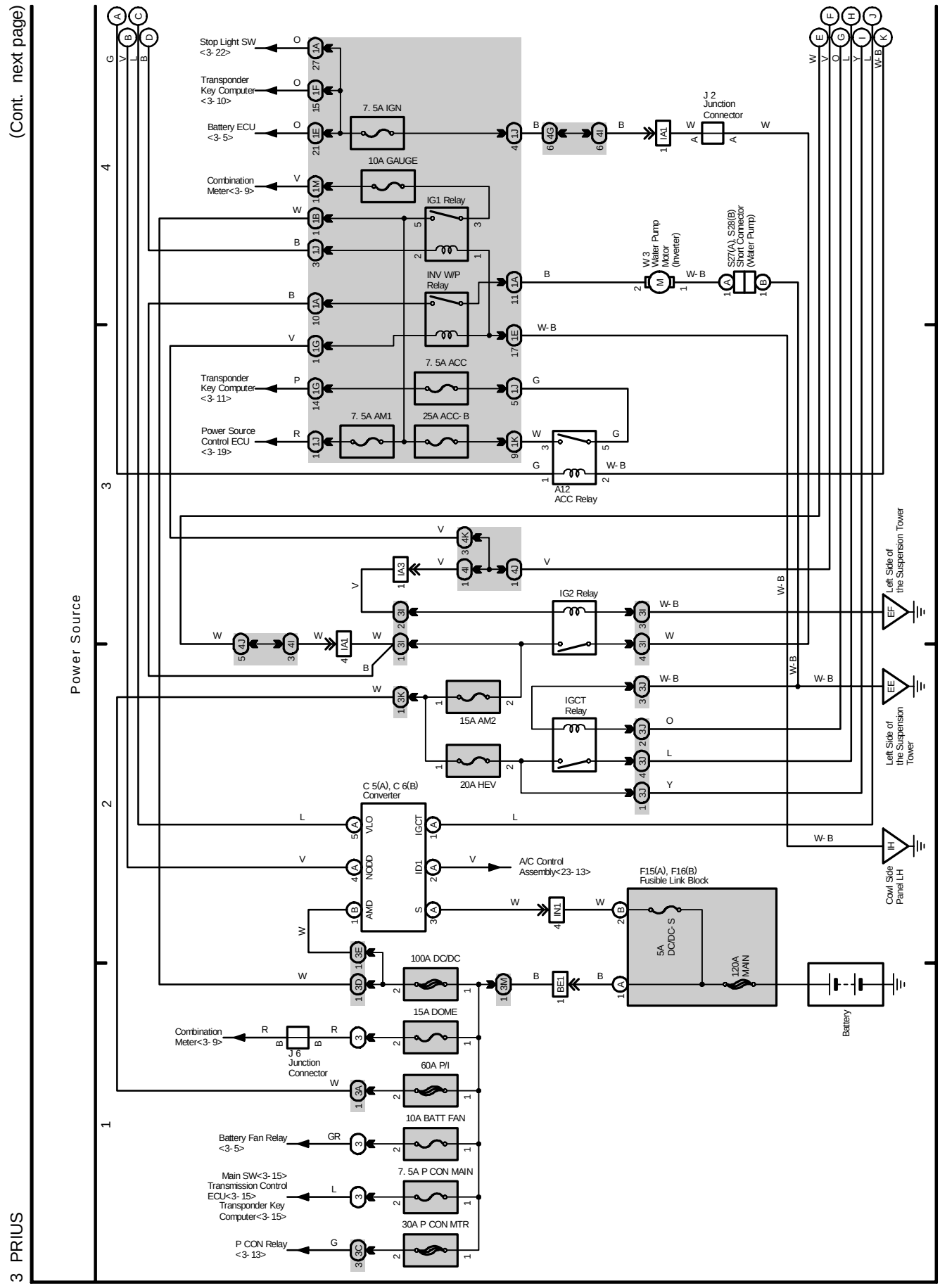

(Cont. next page)

Multiplex Communication System (Power Train Control)

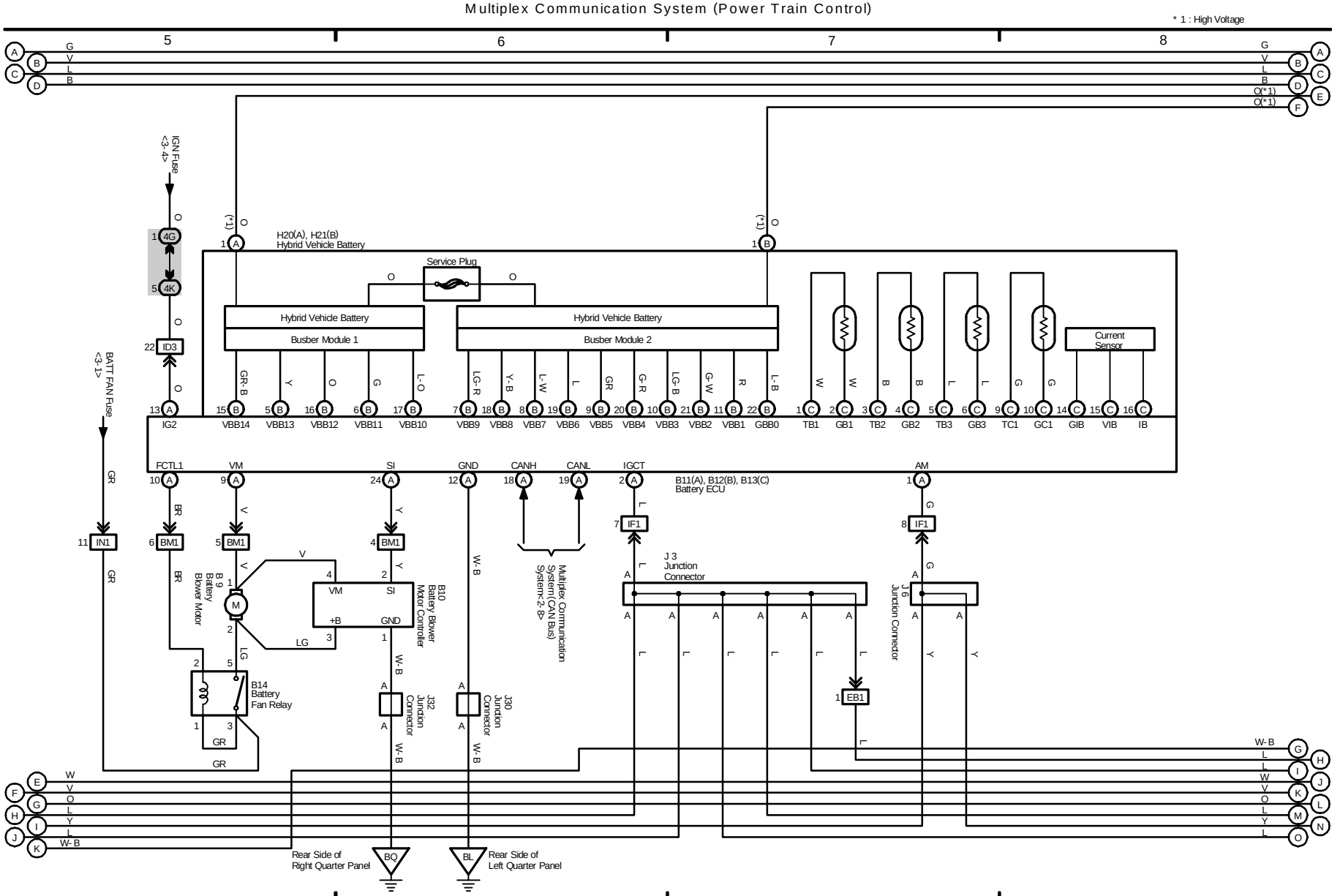

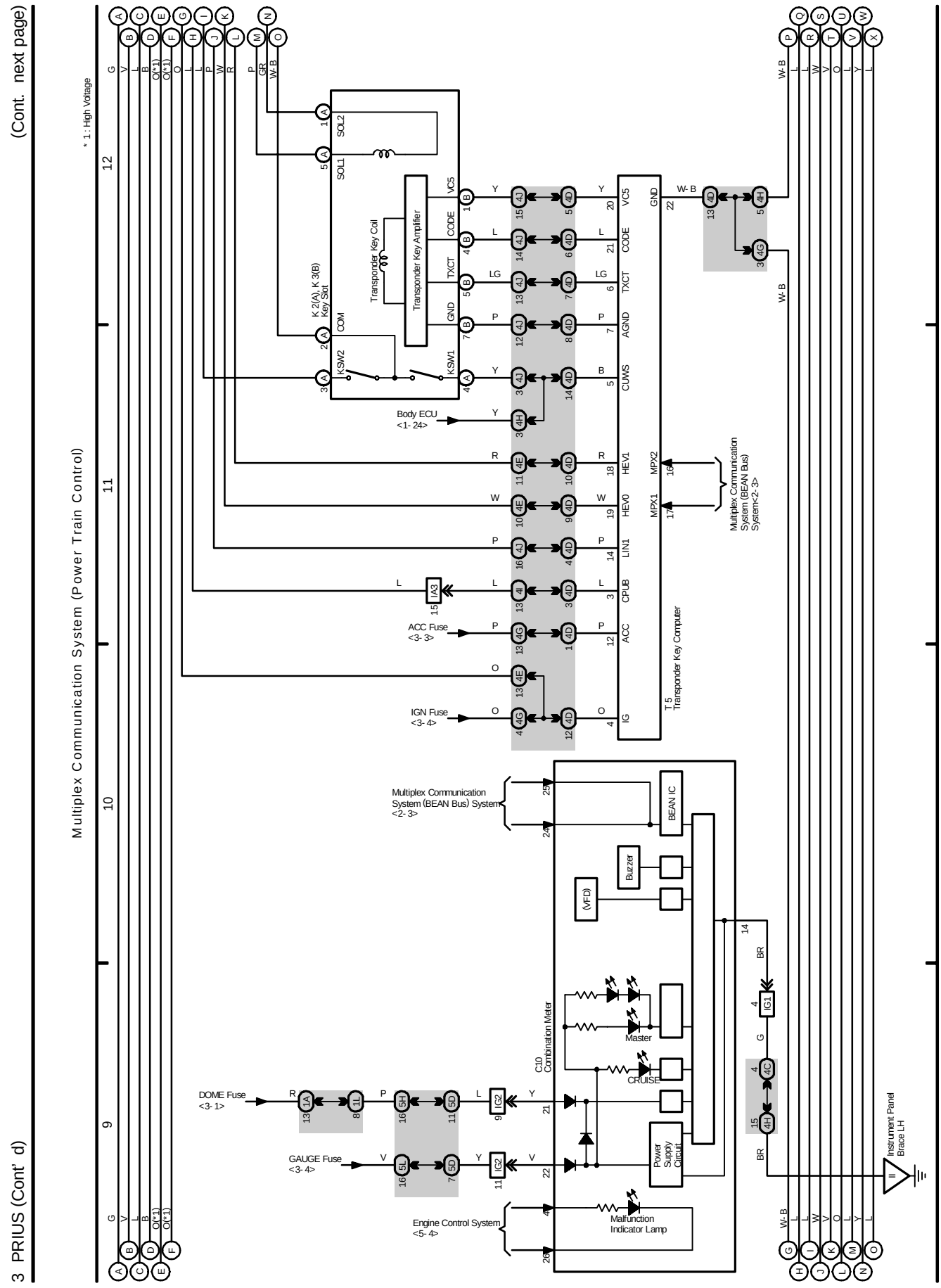
3 PRIUS (Cont' d)
(Cont. next page)
Multiplex Communication System (Power Train Control)
* 1 : High Voltage
T5 Transponder Key Computer
Transponder Key Amplifier
Transponder Key Coil
K-2(A), K-3(B) Key Slot
SOL1
SOL2
COM
KSW1
KSW2
VC5
CODE
TXCT
GND
CUWS
AGND
HEV1
HEV0
LIN1
CPUB
ACC
IG
MPX1
MPX2
Body ECU <1- 24>
ACC Fuse <3- 3>
IGN Fuse <3- 4>
Multiplex Communication System (BEAN Bus) System<2- 3>
Multiplex Communication System (BEAN Bus) System <2- 3>
C10 Combination Meter
BEAN IC
Buzzer
(VFD)
Master
CRUISE
Power Supply Circuit
DOME Fuse <3- 1>
GAUGE Fuse <3- 4>
Engine Control System <5- 4>
Malfunction Indicator Lamp
Instrument Panel Brace LH

Multiplex Communication System (Power Train Control)

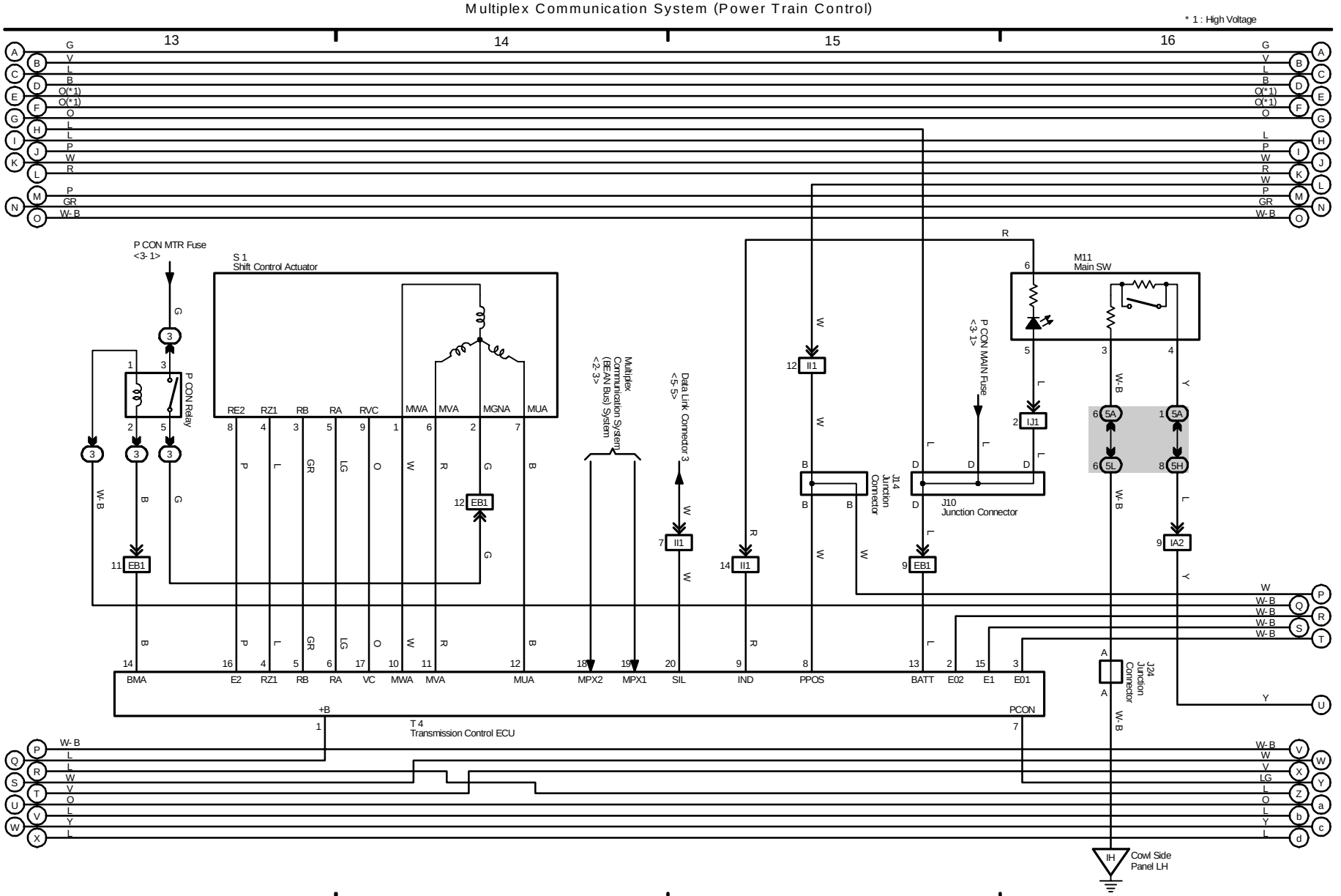

M OVERALL ELECTRICAL WIRING DIAGRAM

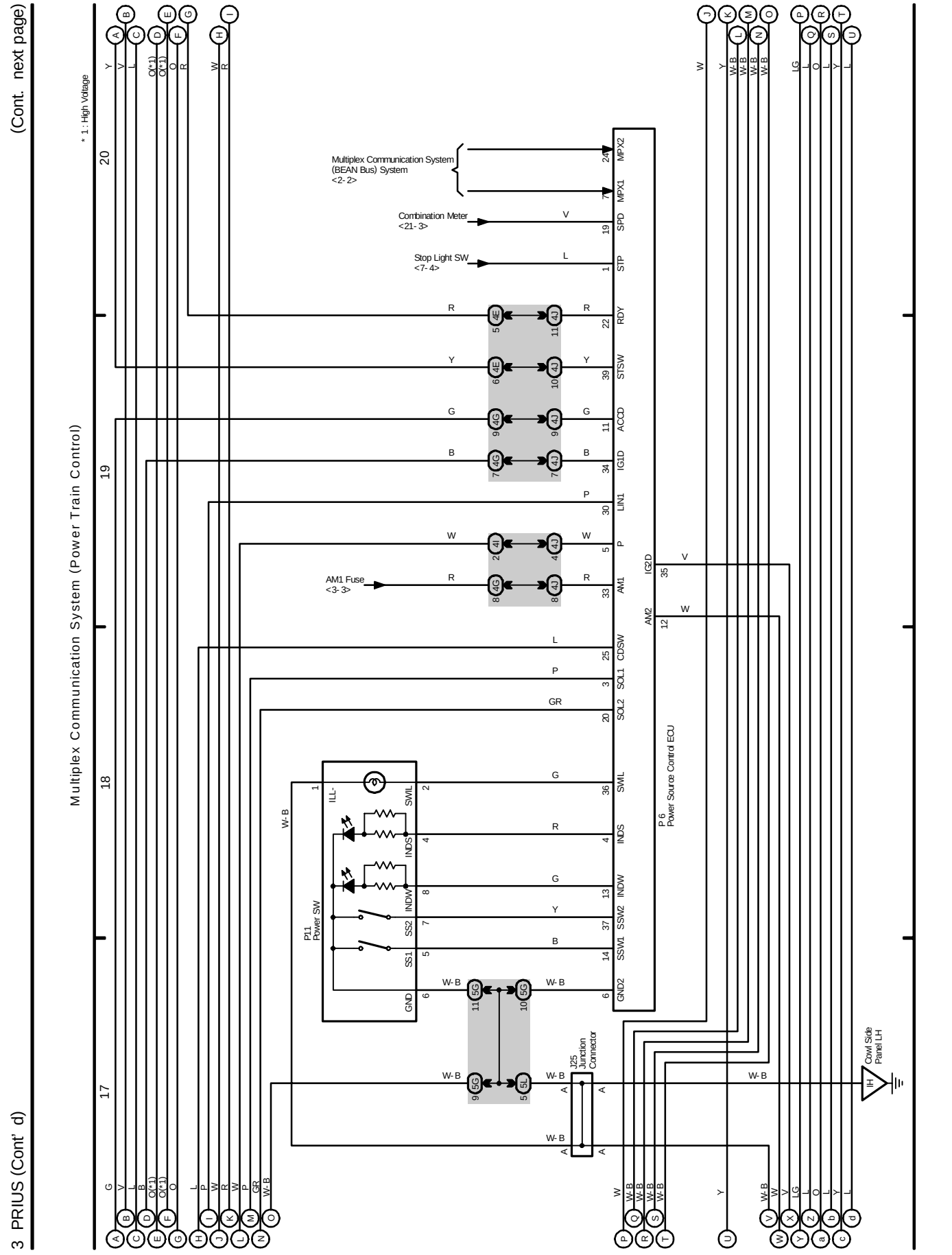

(Cont. next page)

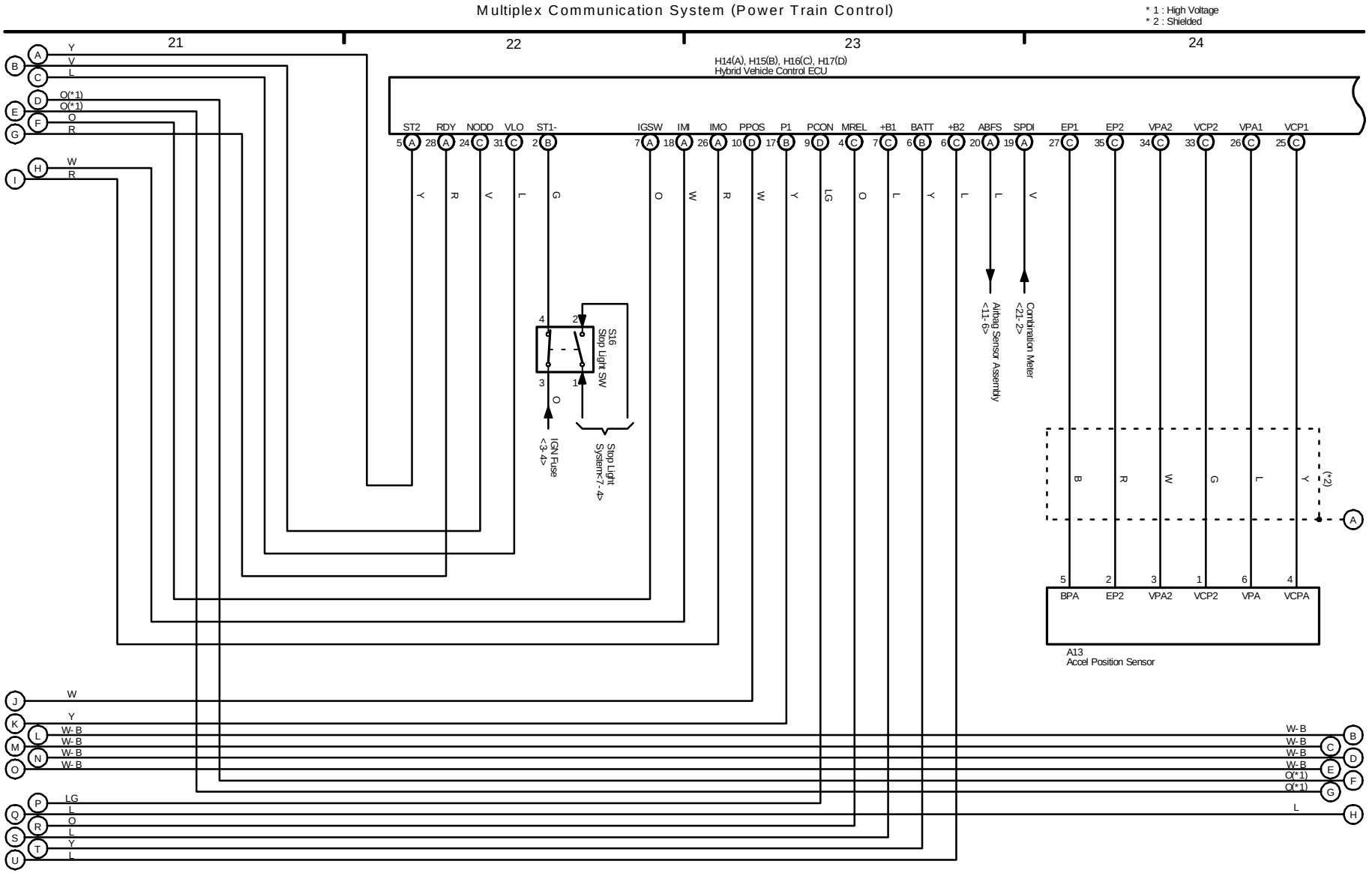

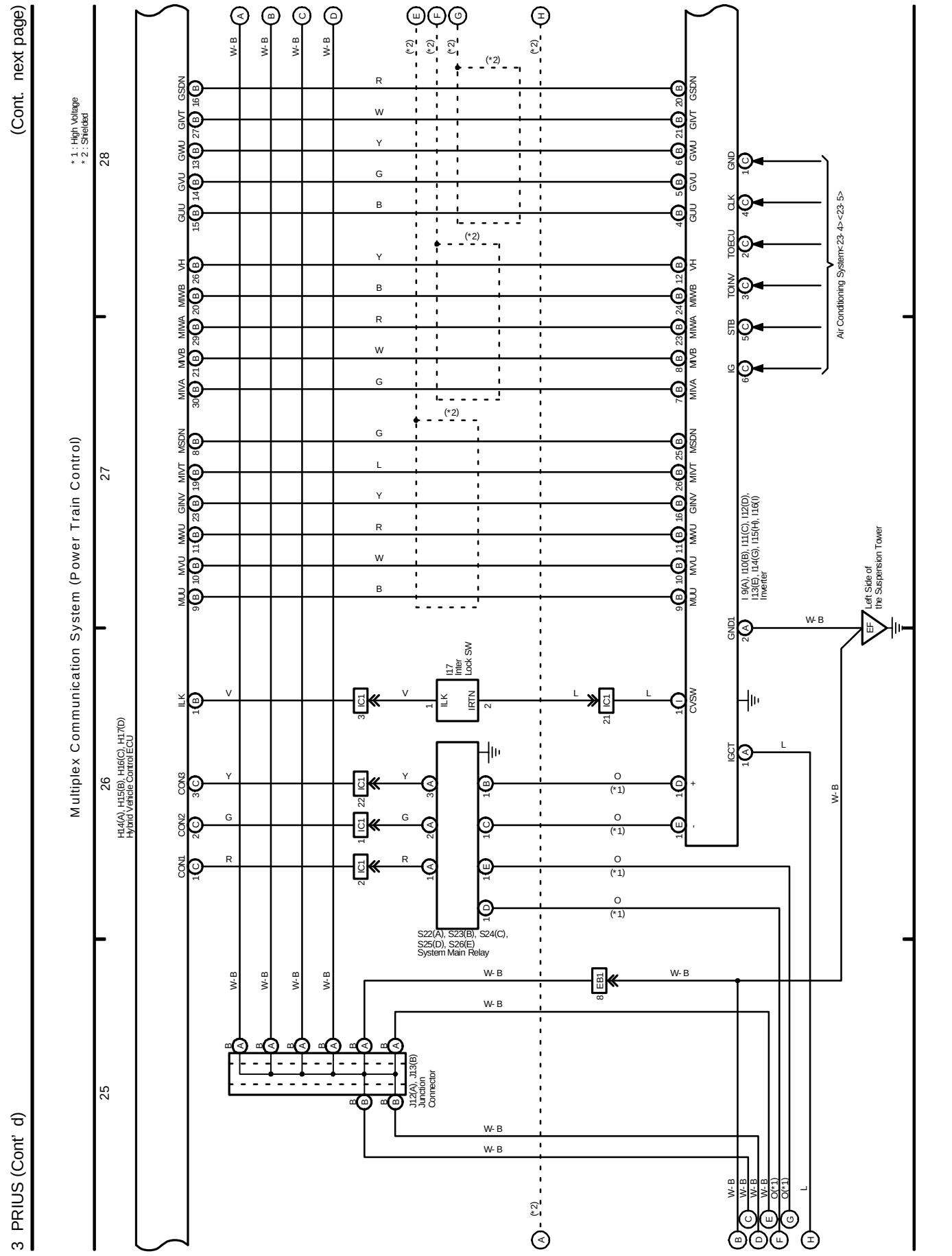
(Cont. next page)
3 PRIUS (Cont' d)
* 1 : High Voltage
* 2 : Shielded
Multiplex Communication System (Power Train Control)
25
26
27
28
H14(A), H15(B), H16(C), H17(D)
Hybrid Vehicle Control ECU
GSDN
GVT
GWU
GVU
GUU
VH
MIWB
MIWA
MVB
MIVA
MSDN
MIVT
GINV
MMU
MVU
MUU
ILK
CON3
CON2
CON1
CVSW
IGCT
GND1
GND
CLK
TOECU
TCINV
STB
IG
Air Conditioning System<23-4><23-5>
I9(A), I10(B), I11(C), I12(D), I13(E), I14(G), I15(H), I16(I) Inverter
Left Side of the Suspension Tower
EF
I17 Inter Lock SW
IC1
EB1
S22(A), S23(B), S24(C), S25(D), S26(E) System Main Relay
J17(A), J13(B) Junction Connector
(*1)
(*2)
W- B

(Cont. next page)

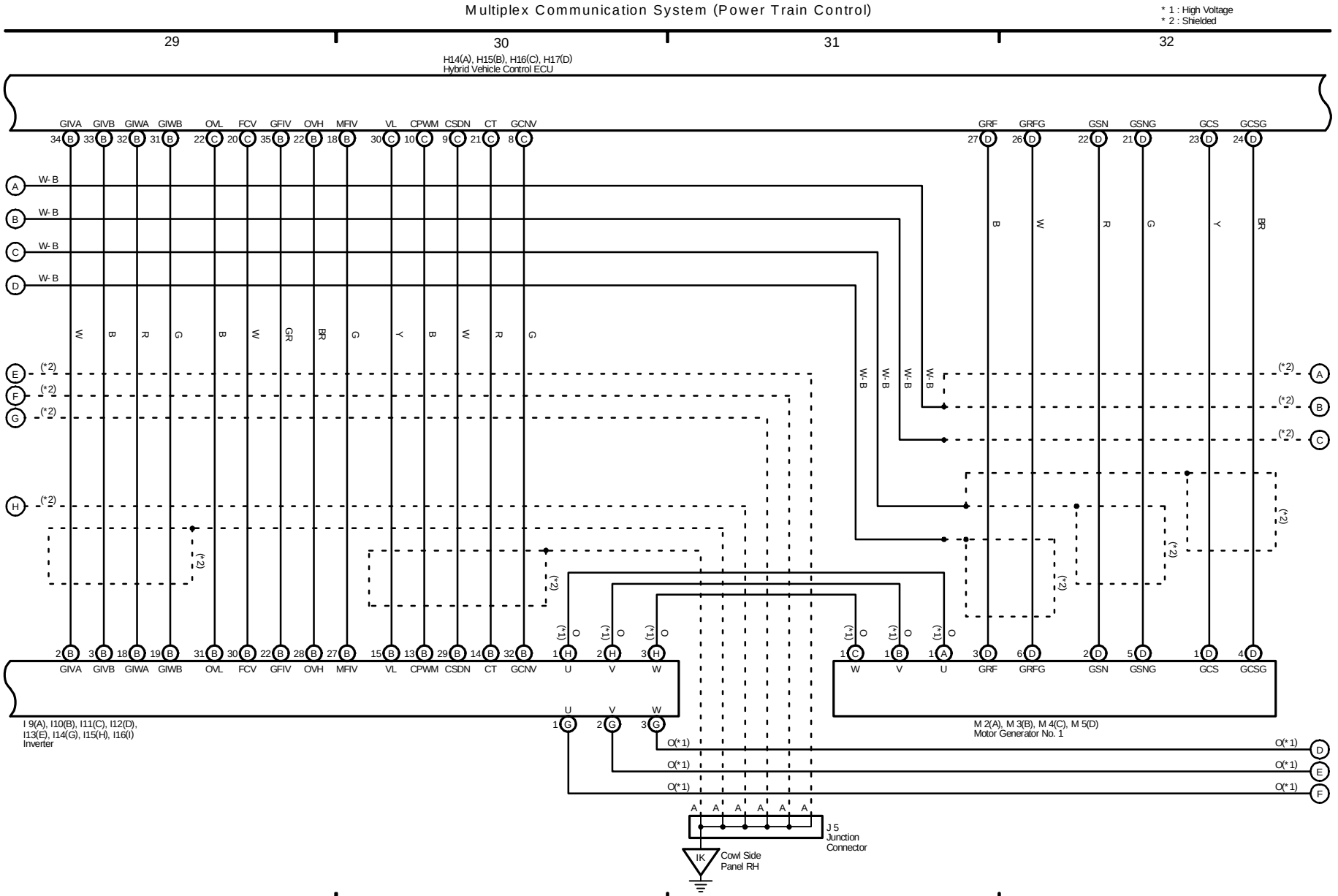

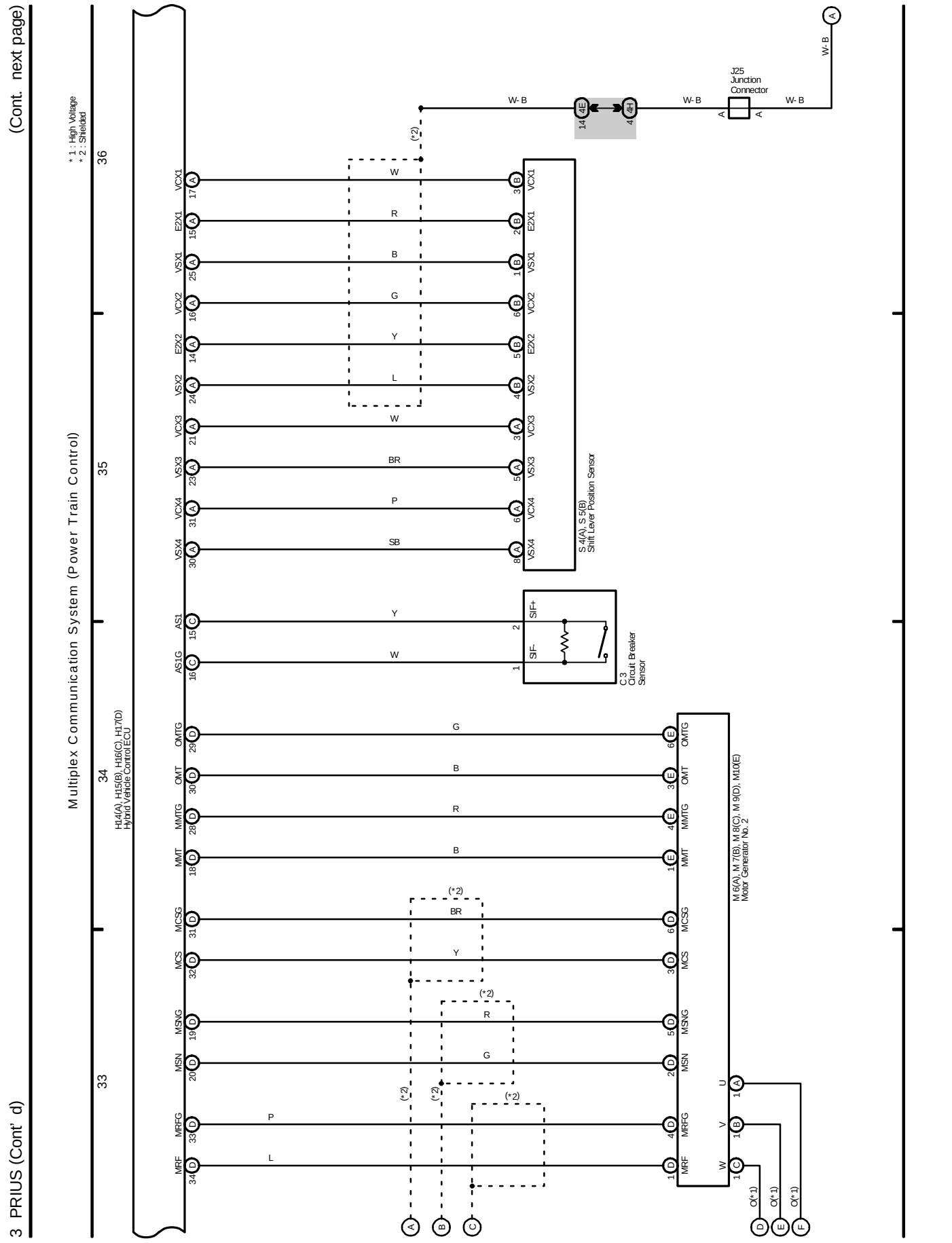
(Cont. next page)
3 PRIUS (Cont' d)
33
34
35
36
Multiplex Communication System (Power Train Control)
* 1 : High Voltage
* 2 : Shielded
H14(A), H15(B), H16(C), H17(D)
Hybrid Vehicle Control ECU
VCX1
E2X1
VSX1
VCX2
E2X2
VSX2
VCX3
VSX3
VCX4
VSX4
W
R
B
G
Y
L
W
BR
P
SB
S 4(A), S 5(B)
Shift Lever Position Sensor
AS1
AS1G
SIF+
SIF-
Y
W
C 3
Circuit Breaker
Sensor
OMTG
OMT
MMTG
MMT
MCSG
MCS
MSNG
MSN
MRFG
MRF
G
B
R
B
BR
Y
R
G
P
L
(*2)
M 6(A), M 7(B), M 8(C), M 9(D), M10(E)
Motor Generator No. 2
U
V
W
O(*1)
W- B
J25
Junction
Connector
4E
4H
A
B
C
D
E
F

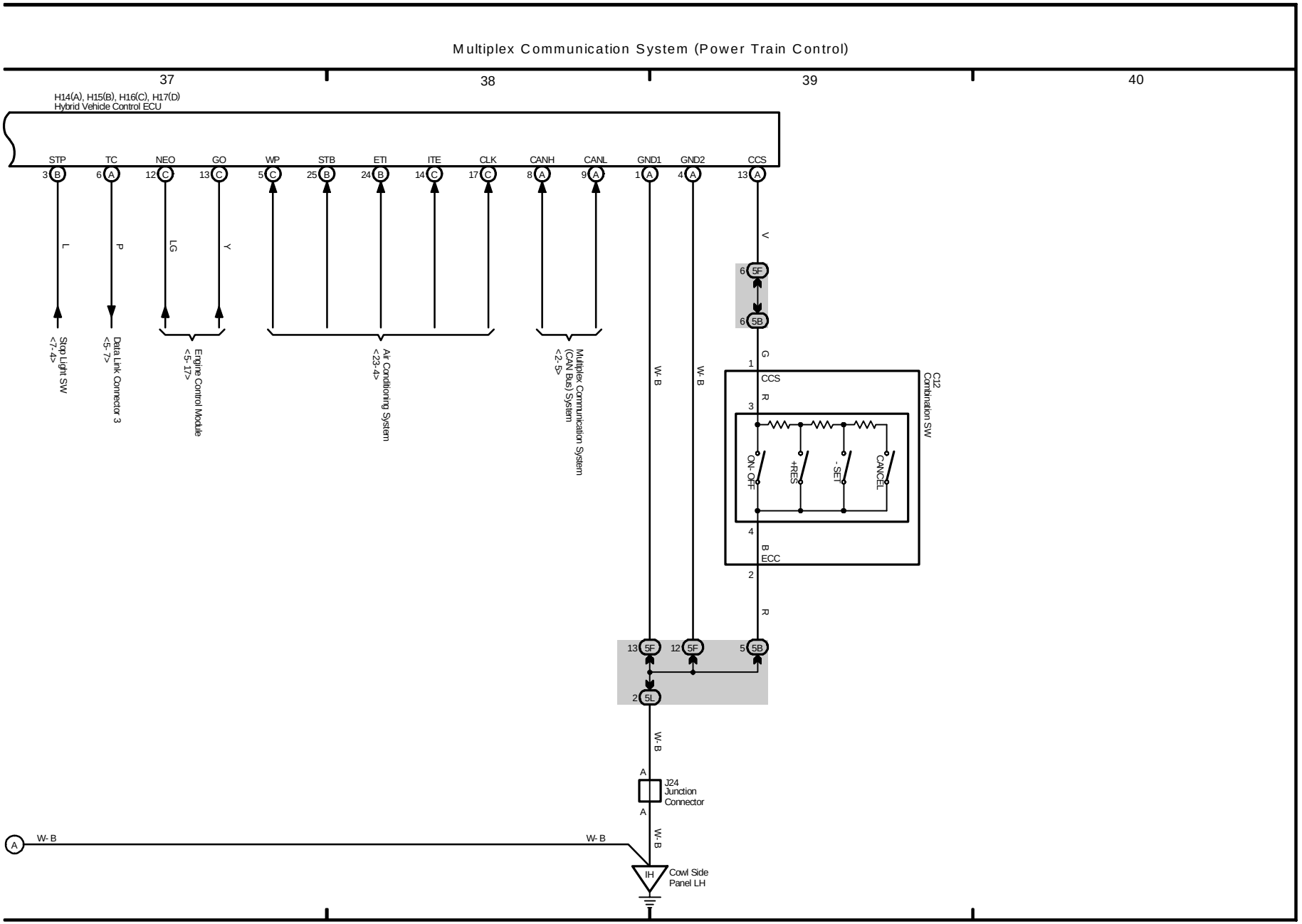
Multiplex Communication System (Power Train Control)
37
38
39
40
H14(A), H15(B), H16(C), H17(D)
Hybrid Vehicle Control ECU
STP
TC
NEO
GO
WP
STB
ETI
ITE
CLK
CANH
CANL
GND1
GND2
CCS
3 B
6 A
12 C
13 C
5 C
25 B
24 B
14 C
17 C
8 A
9 A
1 A
4 A
13 A
L
P
LG
Y
V
6 5F
6 5B
G
1
CCS
R
3
ON- OFF
+RES
- SET
CANCEL
4
B
ECC
2
C12
Combination SW
R
13 5F
12 5F
5 5B
2 5L
W- B
A
J24
Junction
Connector
A
W- B
W- B
A
W- B
IH
Cowl Side
Panel LH
Stop Light SW
<7- 4>
Data Link Connector 3
<5- 7>
Engine Control Module
<5- 17>
Air Conditioning System
<23- 4>
Multiplex Communication System
(CAN Bus) System
<2- 5>

M OVERALL ELECTRICAL WIRING DIAGRAM

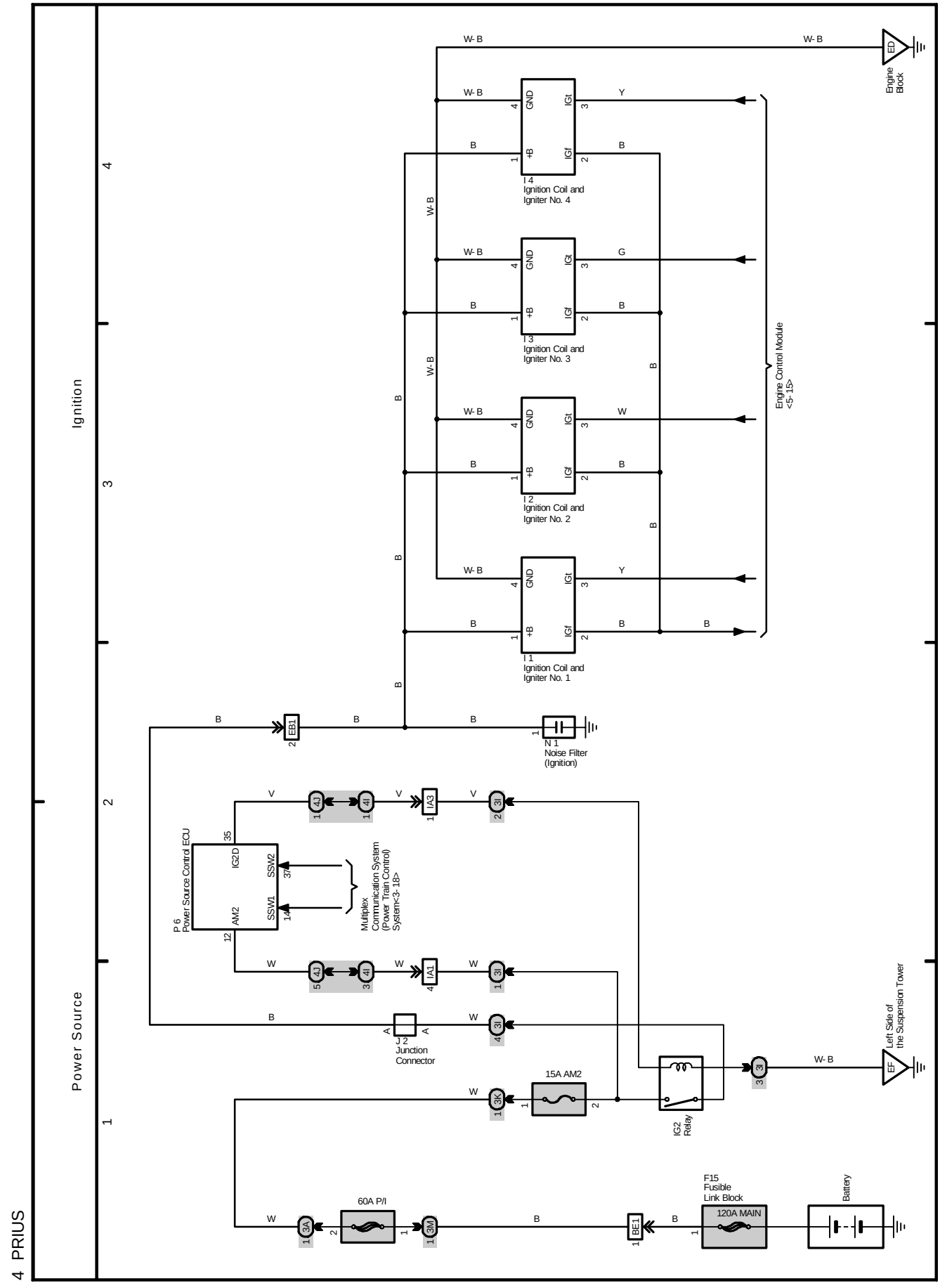

(Cont. next page)

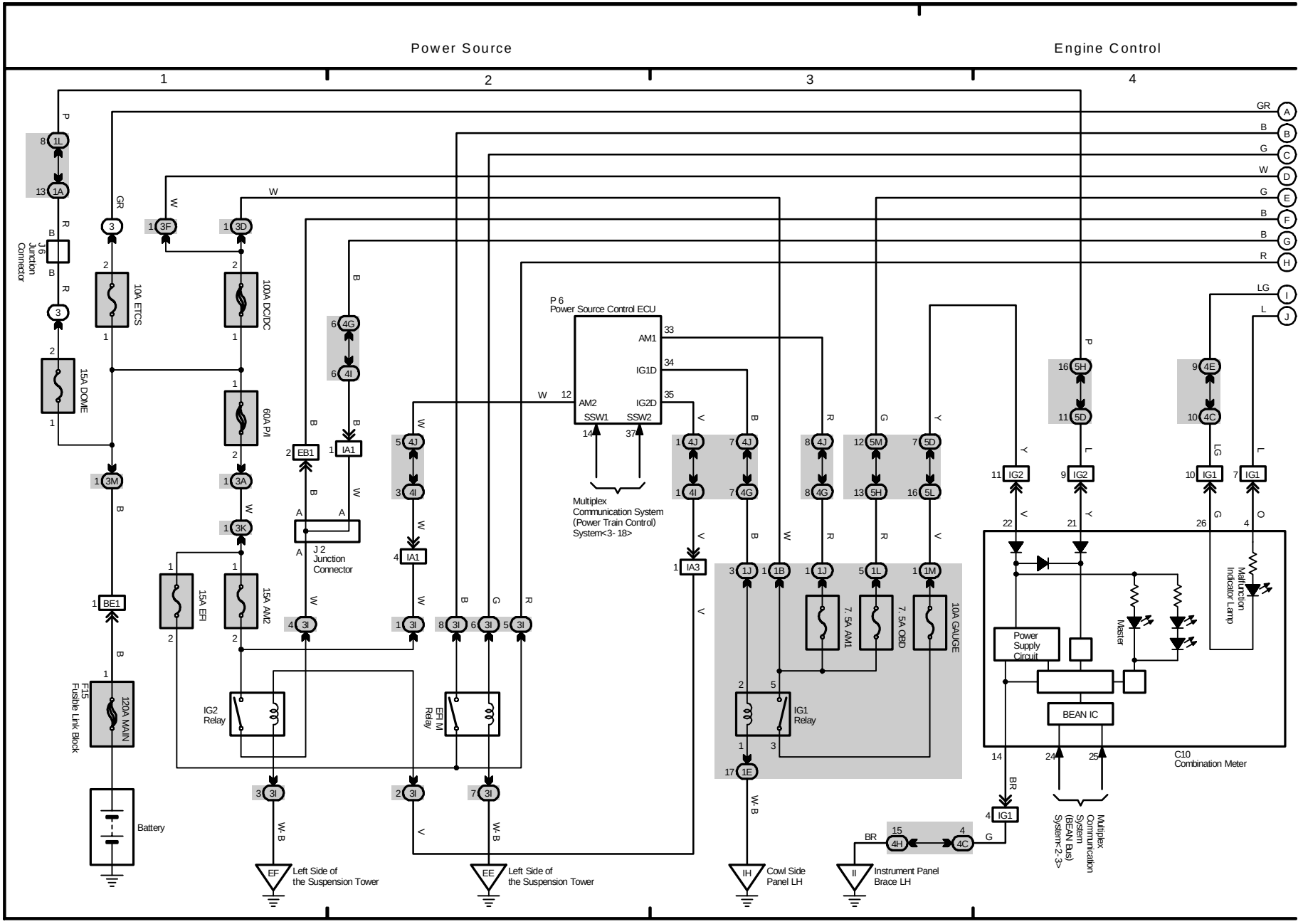

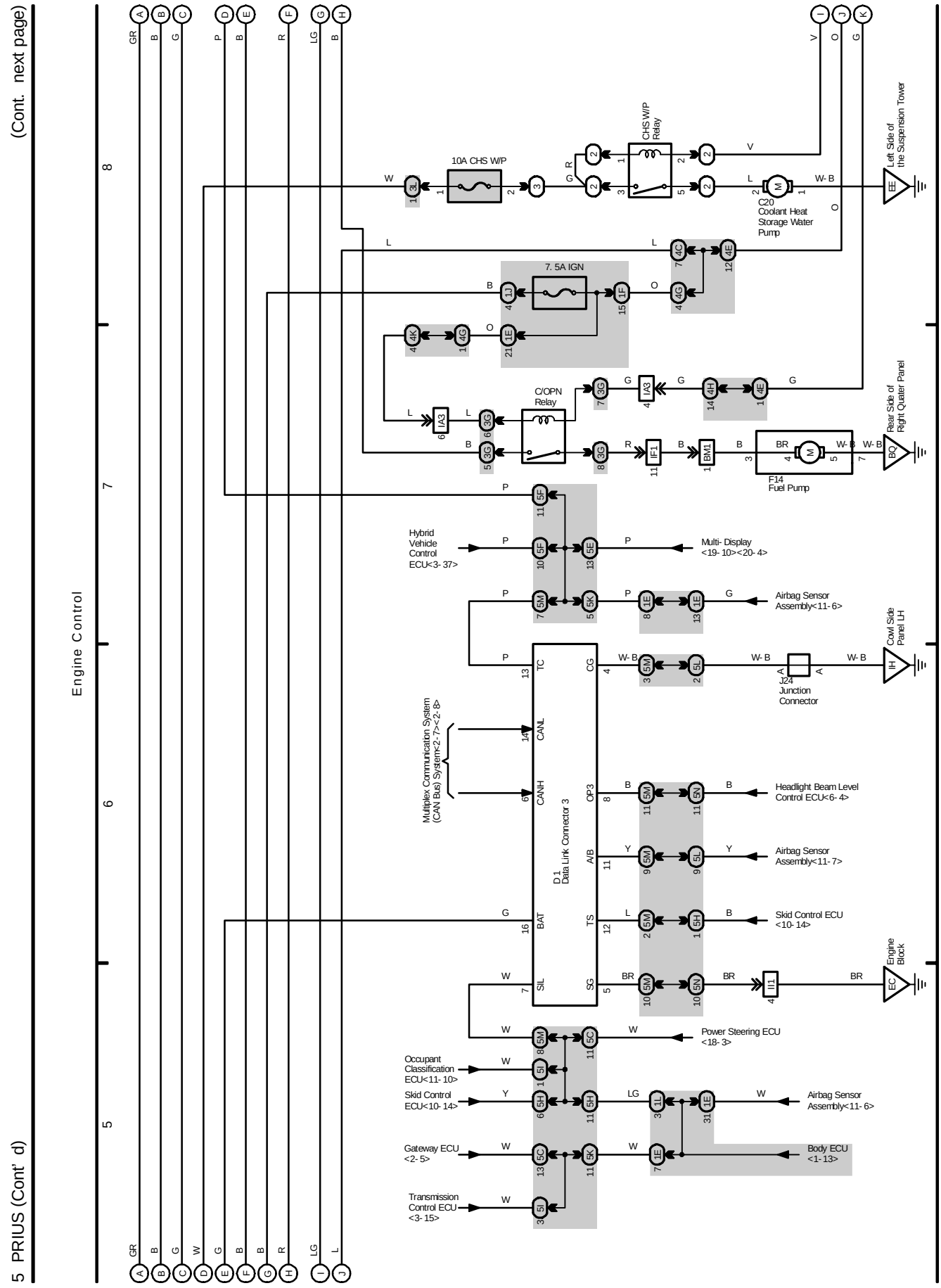
(Cont. next page)
5 PRIUS (Cont' d)
Engine Control
10A CHS W/P
CHS W/P Relay
7. 5A IGN
C/OPN Relay
C20 Coolant Heat Storage Water Pump
F14 Fuel Pump
J24 Junction Connector
D1 Data Link Connector 3
Left Side of the Suspension Tower
Rear Side of Right Quater Panel
Cowl Side Panel LH
Engine Block
Hybrid Vehicle Control ECU<3- 37>
Multi- Display <19- 10><20- 4>
Airbag Sensor Assembly<11- 6>
Multiplex Communication System (CAN Bus) System<2- 7><2- 8>
Headlight Beam Level Control ECU<6- 4>
Airbag Sensor Assembly<11- 7>
Skid Control ECU <10- 14>
Power Steering ECU <18- 3>
Occupant Classification ECU<11- 10>
Skid Control ECU<10- 14>
Gateway ECU <2- 5>
Transmission Control ECU <3- 15>
Body ECU <1- 13>

(Cont. next page)

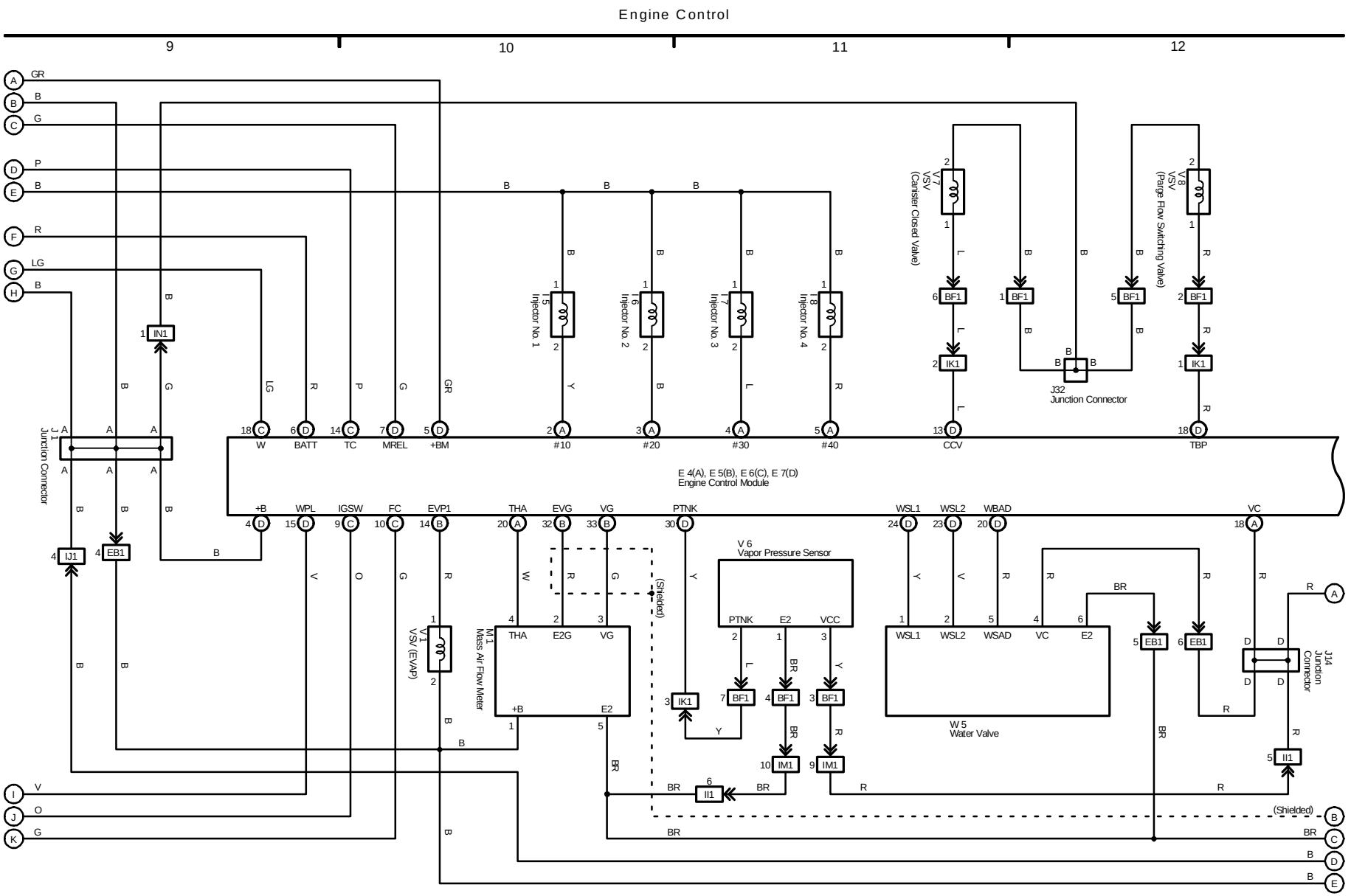

M OVERALL ELECTRICAL WIRING DIAGRAM

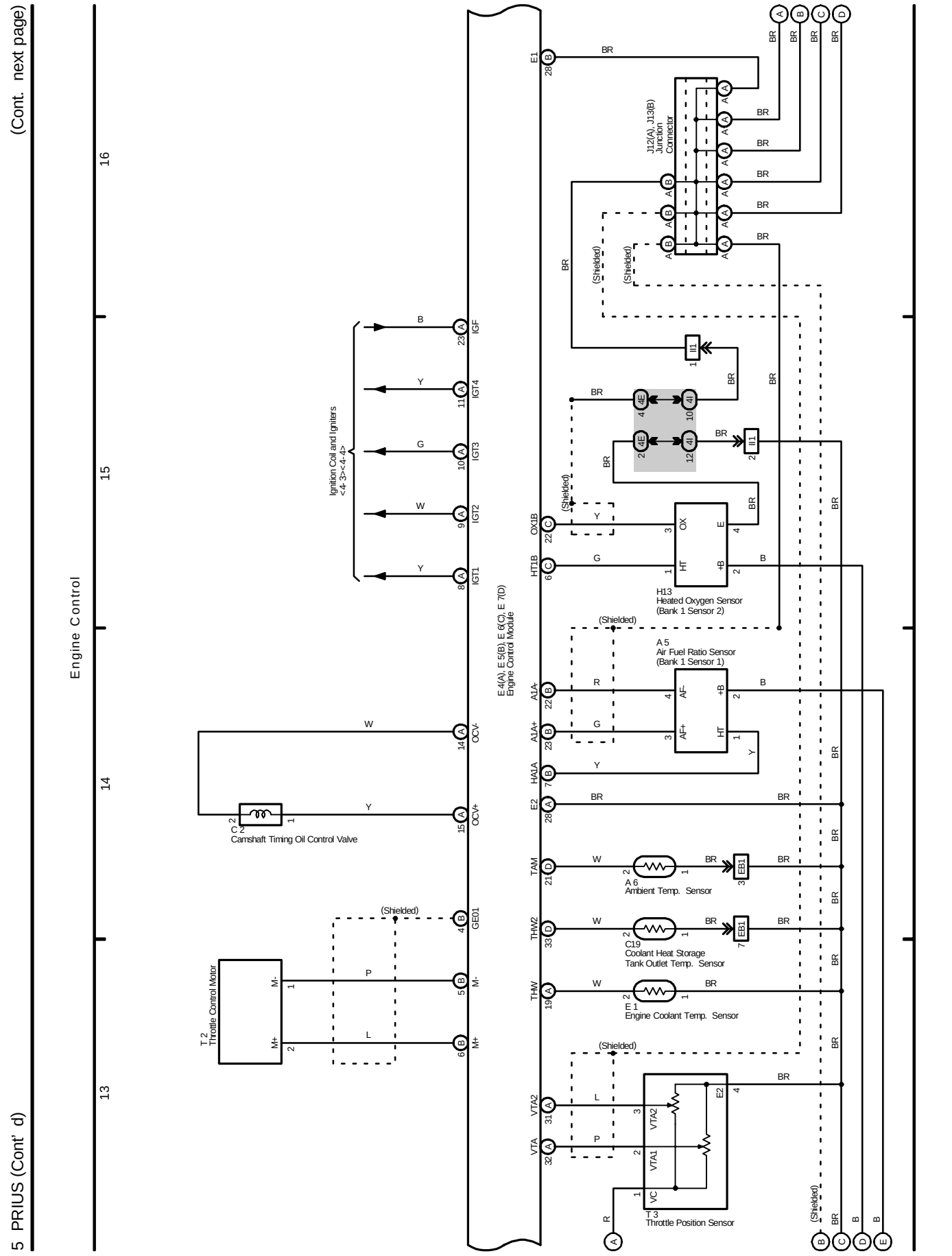

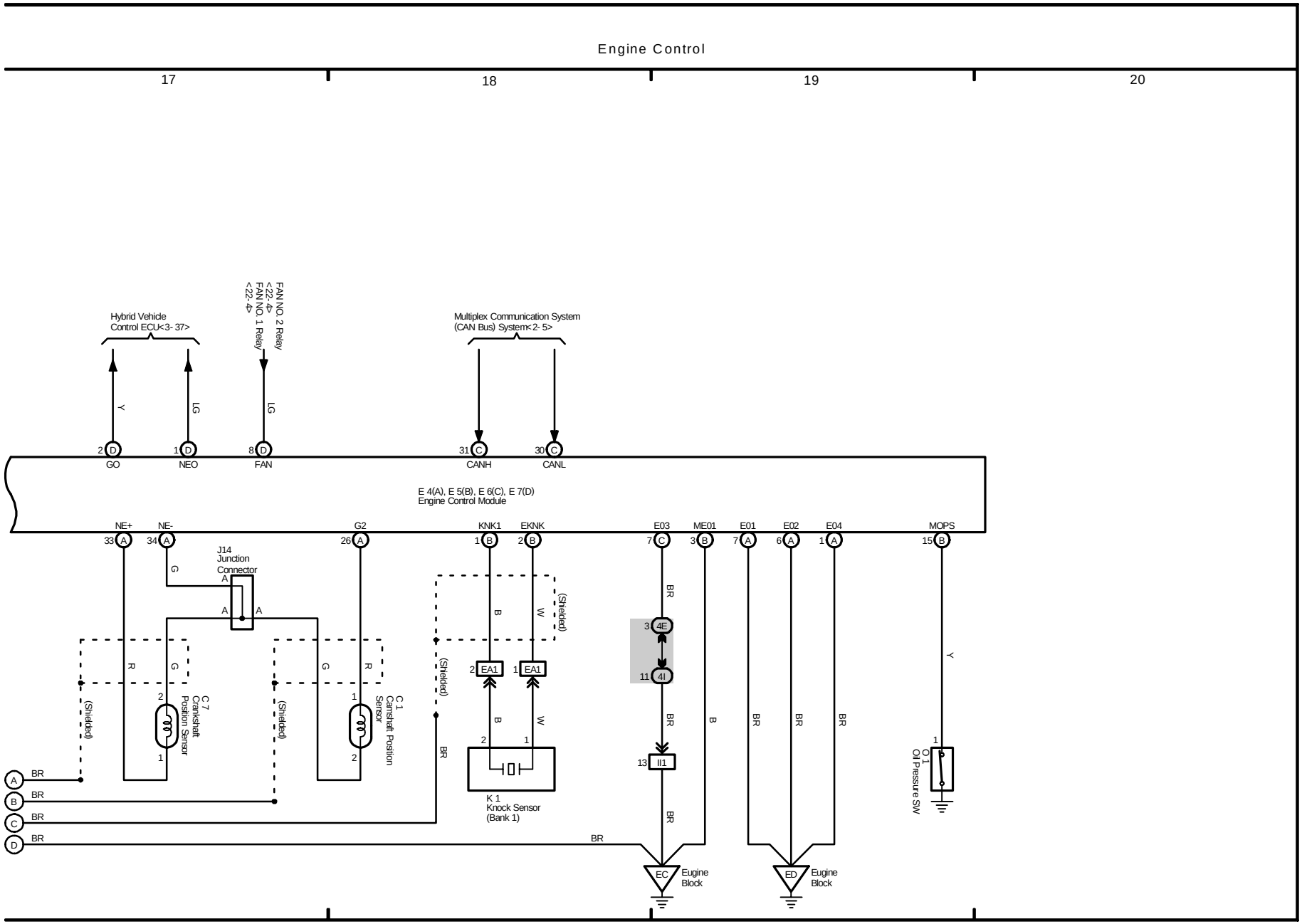
Engine Control
17
18
19
20
Hybrid Vehicle Control ECU<3- 37>
FAN NO. 2 Relay <22- 4>
FAN NO. 1 Relay <22- 4>
Multiplex Communication System (CAN Bus) System<2- 5>
Y
LG
LG
2 D GO
1 D NEO
8 D FAN
31 C CANH
30 C CANL
E 4(A), E 5(B), E 6(C), E 7(D)
Engine Control Module
NE+ 33 A
NE- 34 A
G2 26 A
KNK1 1 B
EKNK 2 B
E03 7 C
ME01 3 B
E01 7 A
E02 6 A
E04 1 A
MOPS 15 B
J14 Junction Connector
G
A
A A
R
G
G
R
(Shielded)
(Shielded)
(Shielded)
(Shielded)
B
W
2 EA1
1 EA1
B
W
2
1
K 1 Knock Sensor (Bank 1)
C 7 Crankshaft Position Sensor
C 1 Camshaft Position Sensor
BR
3 4E
11 4I
13 II1
BR
BR
BR
BR
B
BR
BR
BR
Y
1
O 1 Oil Pressure SW
A BR
B BR
C BR
D BR
BR
EC Eugine Block
ED Eugine Block

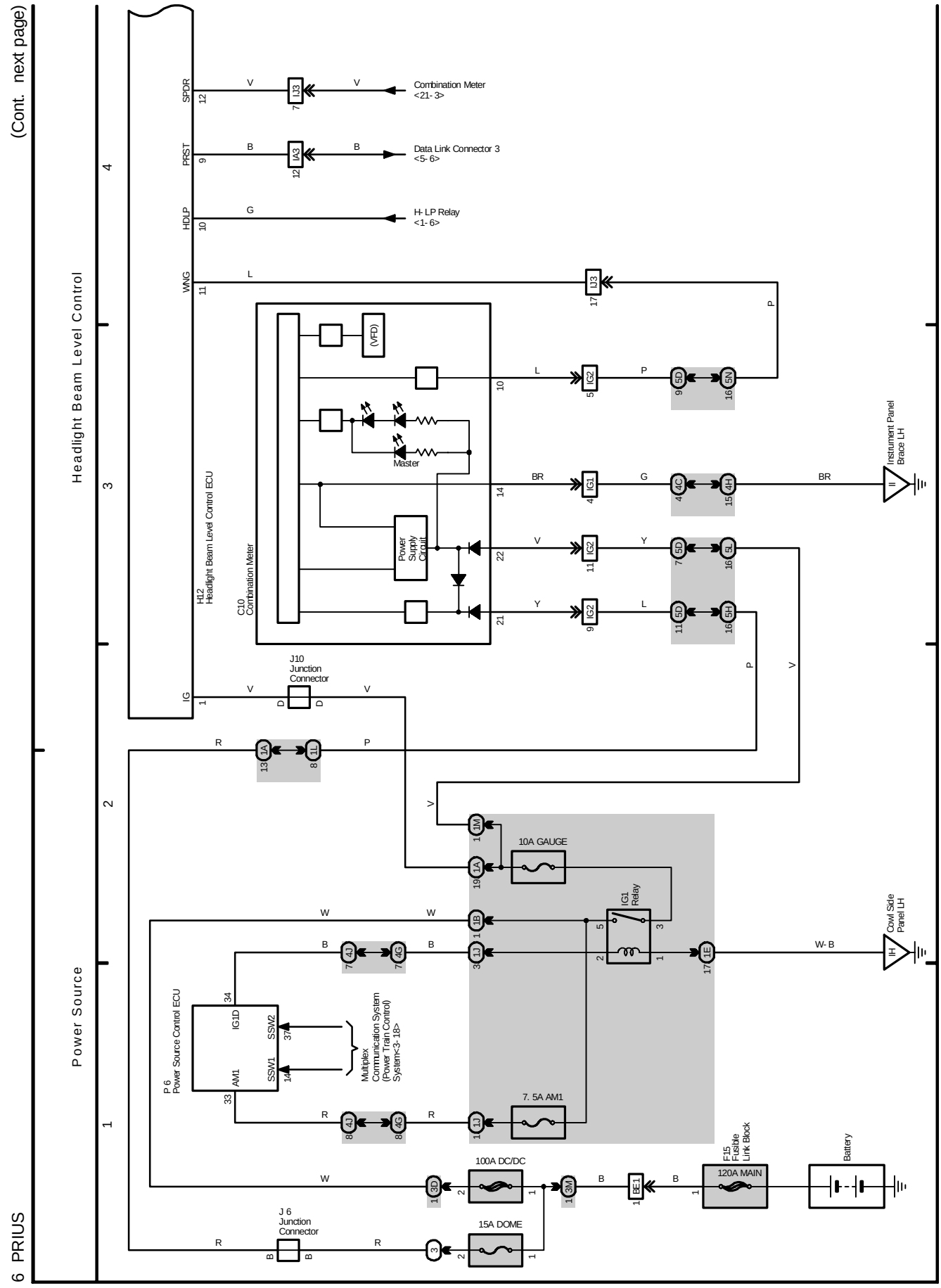
(Cont. next page)
Headlight Beam Level Control
Power Source
6 PRIUS
SPDR
PRST
HDLP
WNG
IG
Combination Meter <21- 3>
Data Link Connector 3 <5- 6>
H- LP Relay <1- 6>
(VFD)
Master
Power Supply Circuit
H12 Headlight Beam Level Control ECU
C10 Combination Meter
J10 Junction Connector
J 6 Junction Connector
Instrument Panel Brace LH
Cowl Side Panel LH
10A GAUGE
IG1 Relay
7. 5A AM1
15A DOME
100A DC/DC
120A MAIN
F15 Fusible Link Block
Battery
P 6 Power Source Control ECU
IG1D
AM1
SSW1
SSW2
Multiplex Communication System (Power Train Control) System<3- 18>

Headlight Beam Level Control

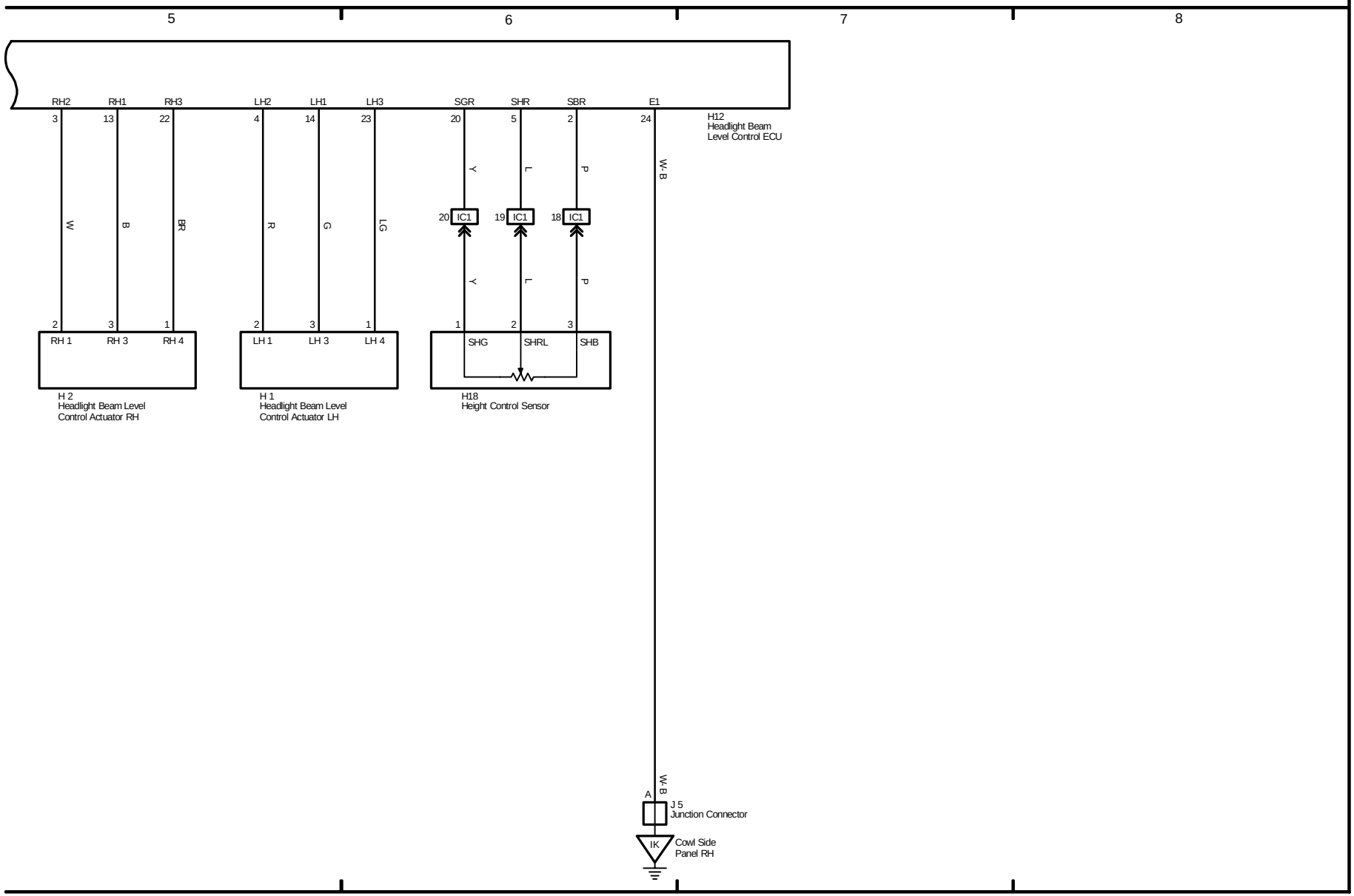

M OVERALL ELECTRICAL WIRING DIAGRAM

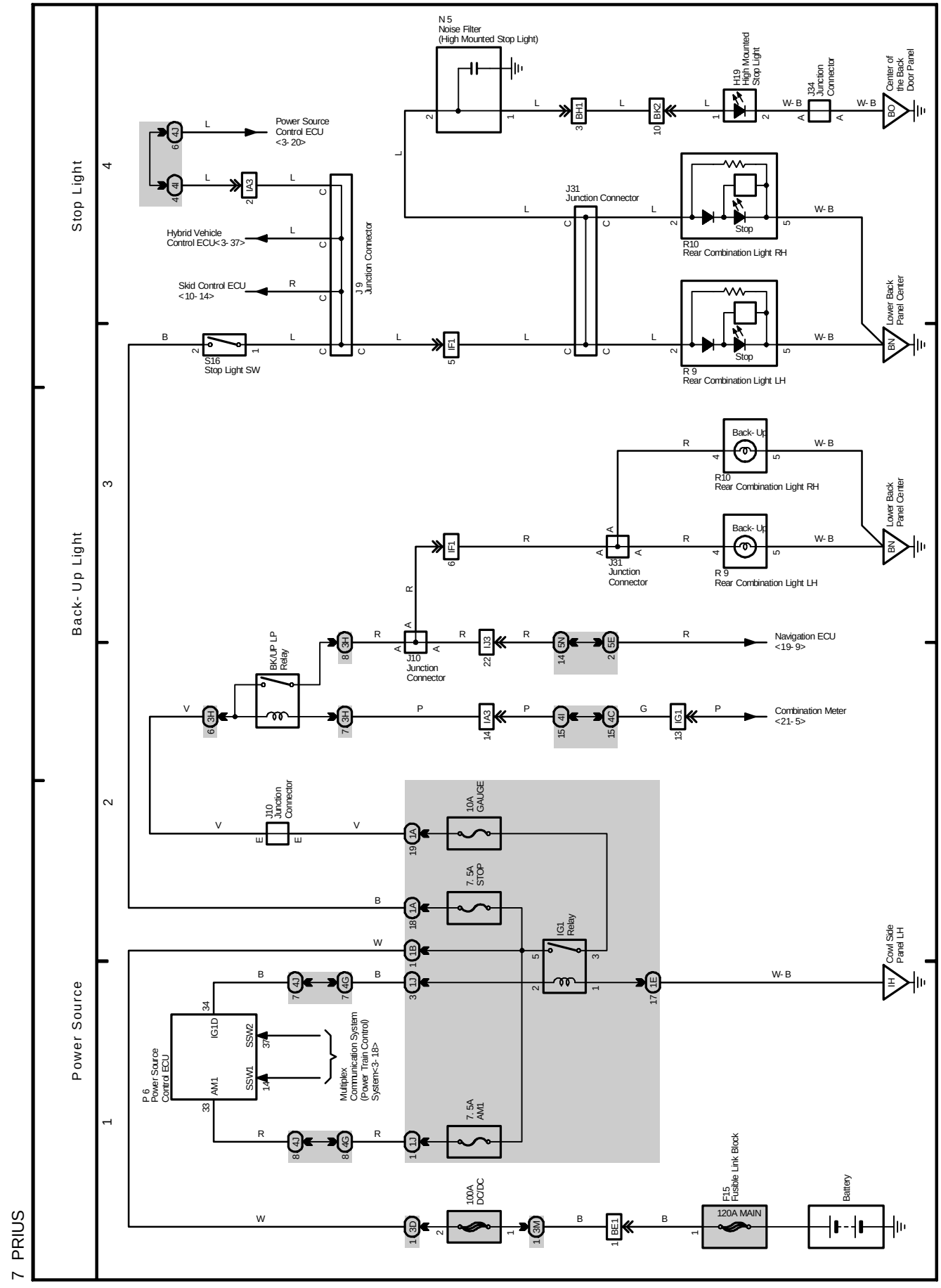

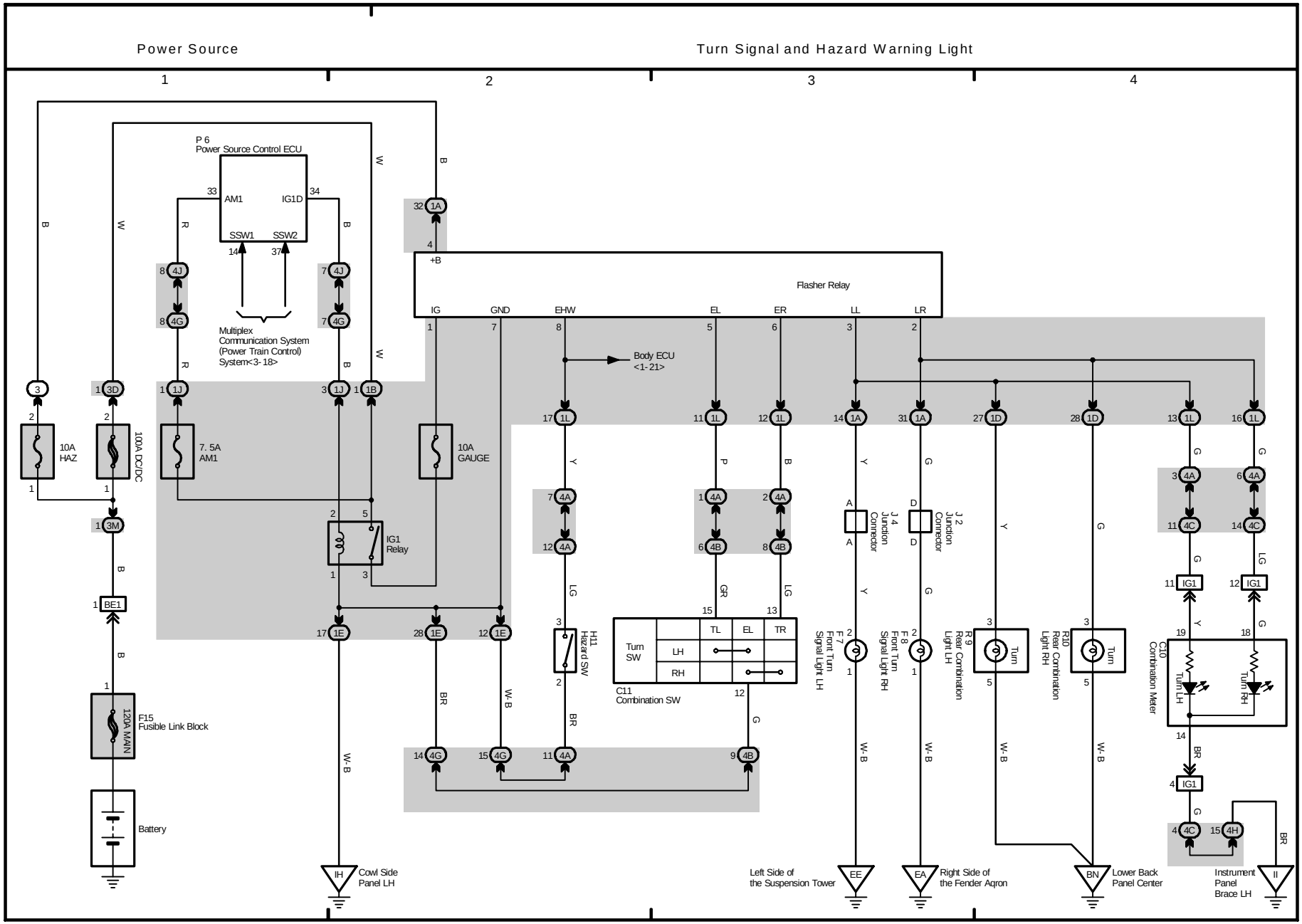
Power Source
Turn Signal and Hazard Warning Light
1
2
3
4
P 6
Power Source Control ECU
AM1
IG1D
SSW1
SSW2
Multiplex Communication System (Power Train Control) System<3-18>
Flasher Relay
IG
GND
EHW
EL
ER
LL
LR
+B
Body ECU <1-21>
10A HAZ
100A DC/DC
7. 5A AM1
10A GAUGE
IG1 Relay
H11 Hazard SW
C11 Combination SW
Turn SW
TL
EL
TR
LH
RH
J 4 Junction Connector
J 2 Junction Connector
F 7 Front Turn Signal Light LH
F 8 Front Turn Signal Light RH
R 9 Rear Combination Light LH
R10 Rear Combination Light RH
C10 Combination Meter
Turn LH
Turn RH
Turn
F15 Fusible Link Block
120A MAIN
Battery
Cowl Side Panel LH
Left Side of the Suspension Tower
Right Side of the Fender Aqron
Lower Back Panel Center
Instrument Panel Brace LH

M OVERALL ELECTRICAL WIRING DIAGRAM

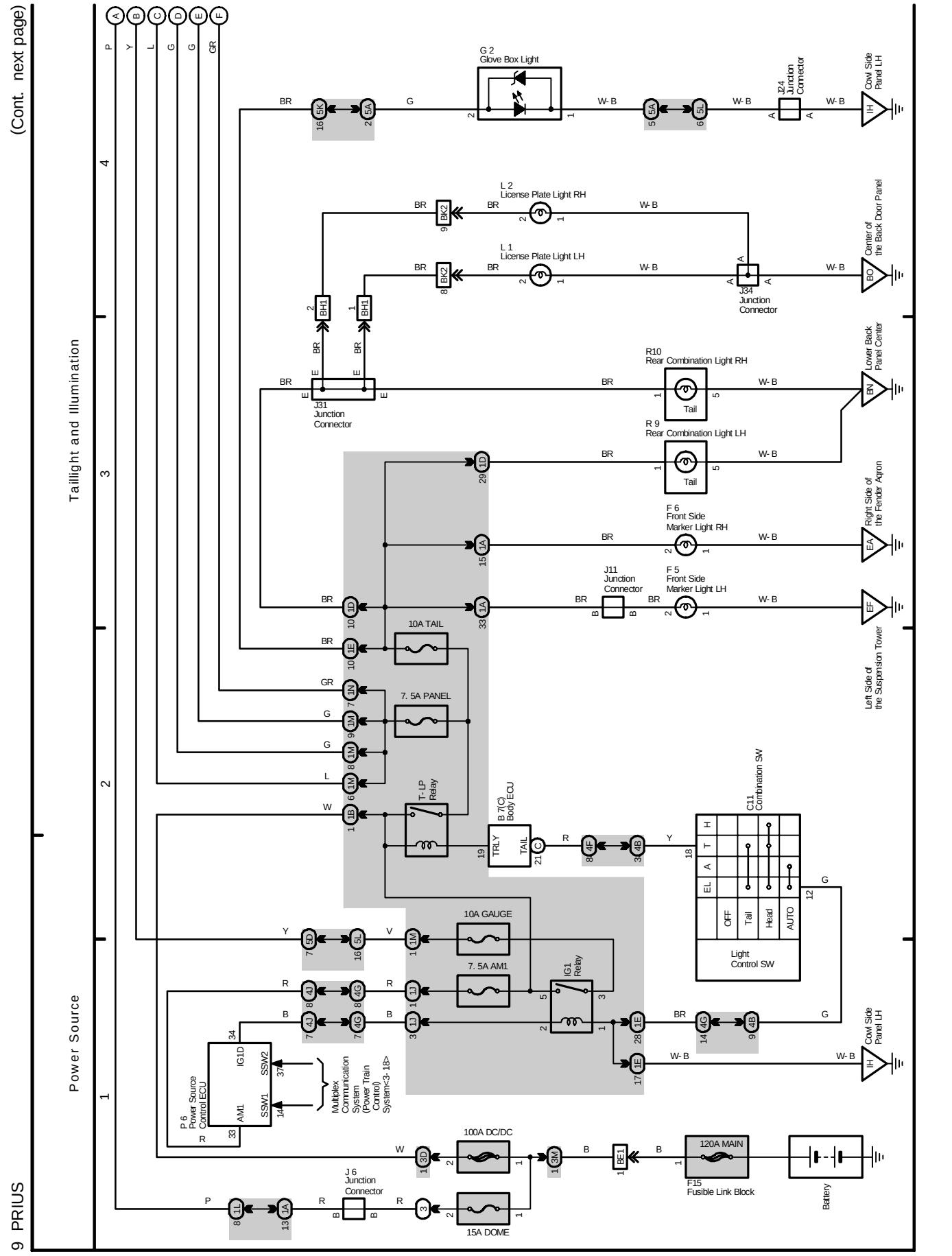

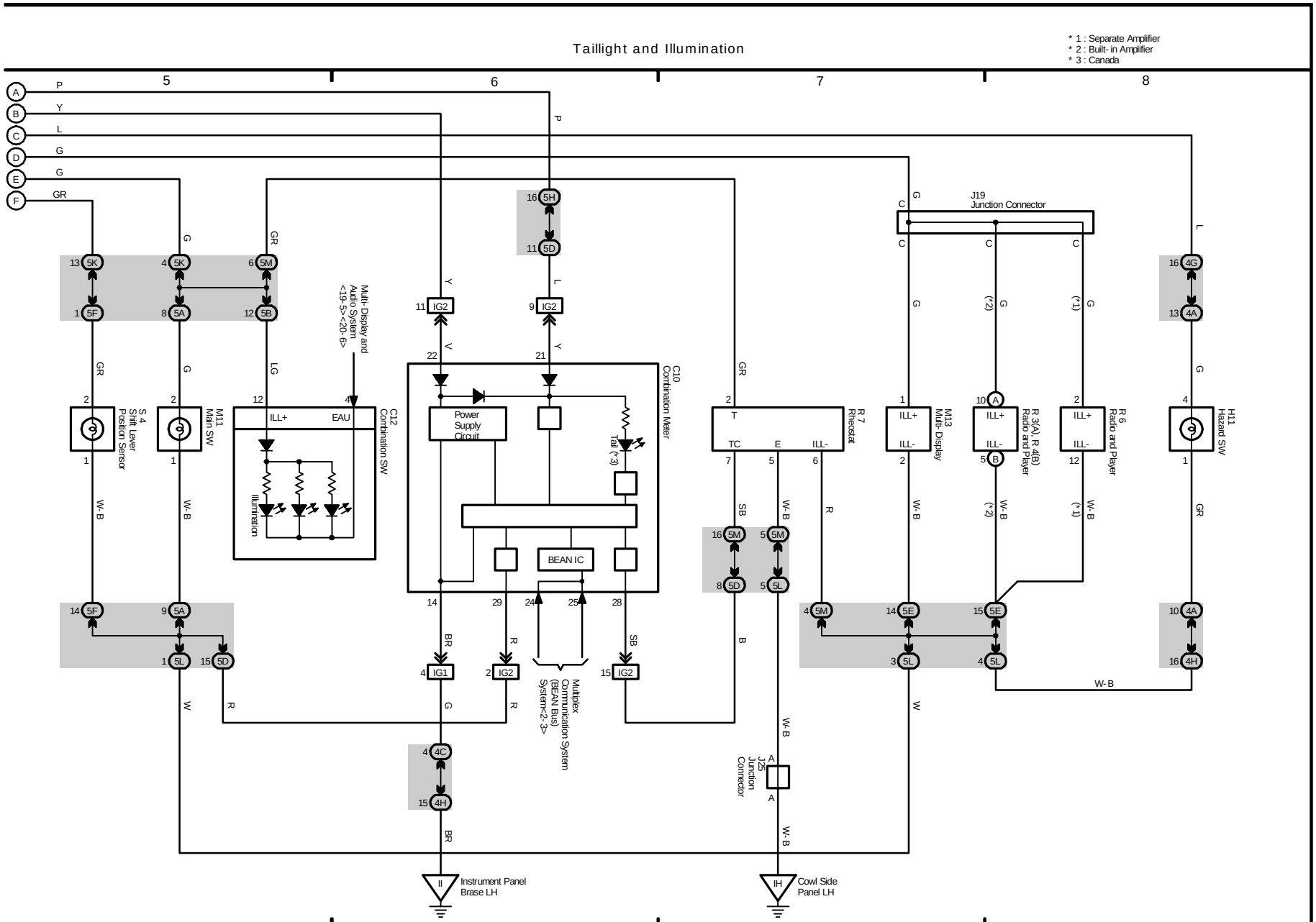
Taillight and Illumination
* 1 : Separate Amplifier
* 2 : Built- in Amplifier
* 3 : Canada
Multi- Display and Audio System <19- 5><20- 6>
S 4 Shift Lever Position Sensor
M11 Main SW
C12 Combination SW
Illumination
C10 Combination Meter
Power Supply Circuit
Tail (*3)
BEAN IC
R 7 Rheostat
M13 Multi- Display
R 3(A) R 4(B) Radio and Player
R 6 Radio and Player
H11 Hazard SW
J19 Junction Connector
J25 Junction Connector
Multiplex Communication System (BEAN Bus) System<2- 3>
Instrument Panel Brase LH
Cowl Side Panel LH

M OVERALL ELECTRICAL WIRING DIAGRAM

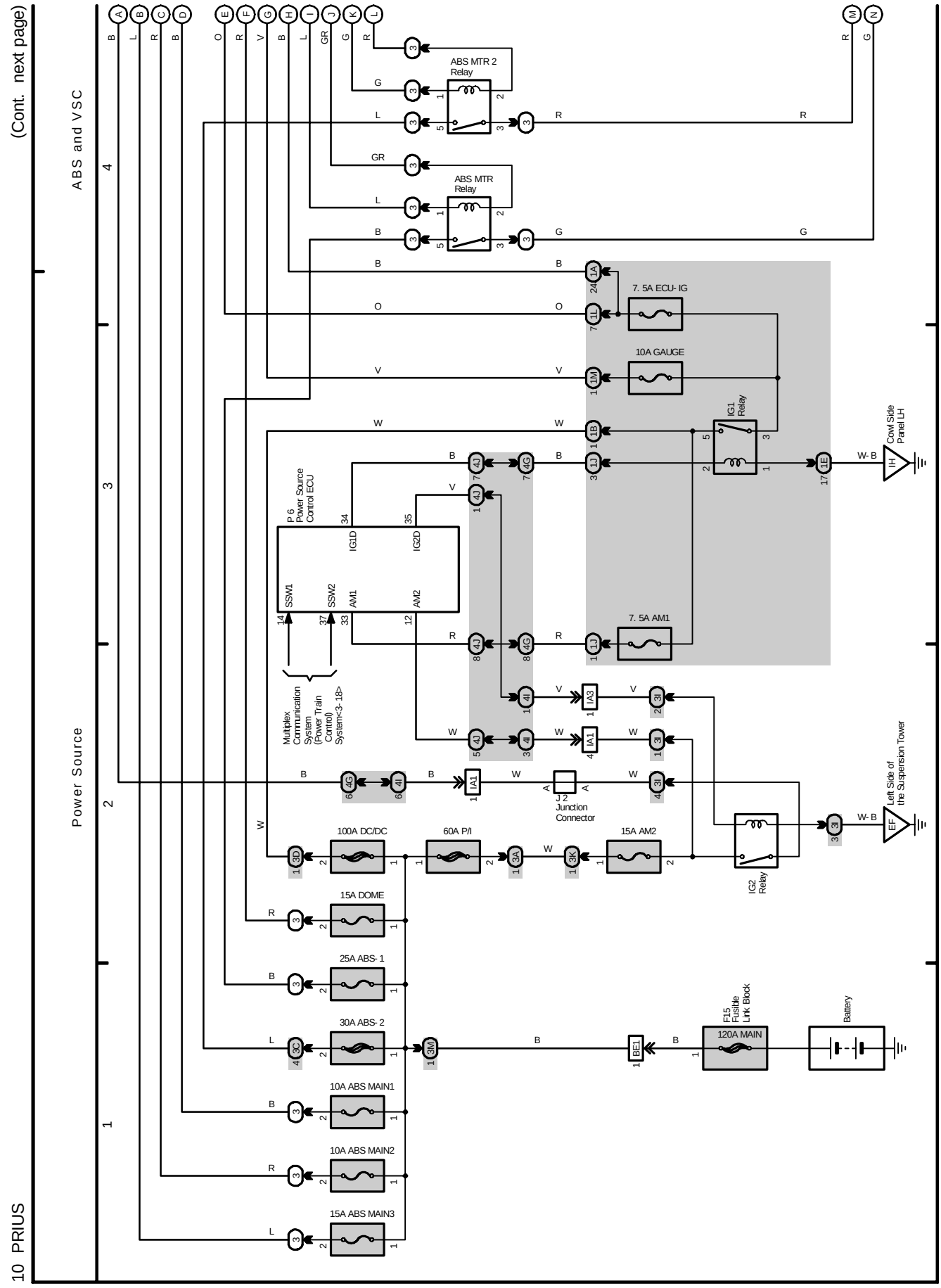

(Cont. next page)

ABS and VSC

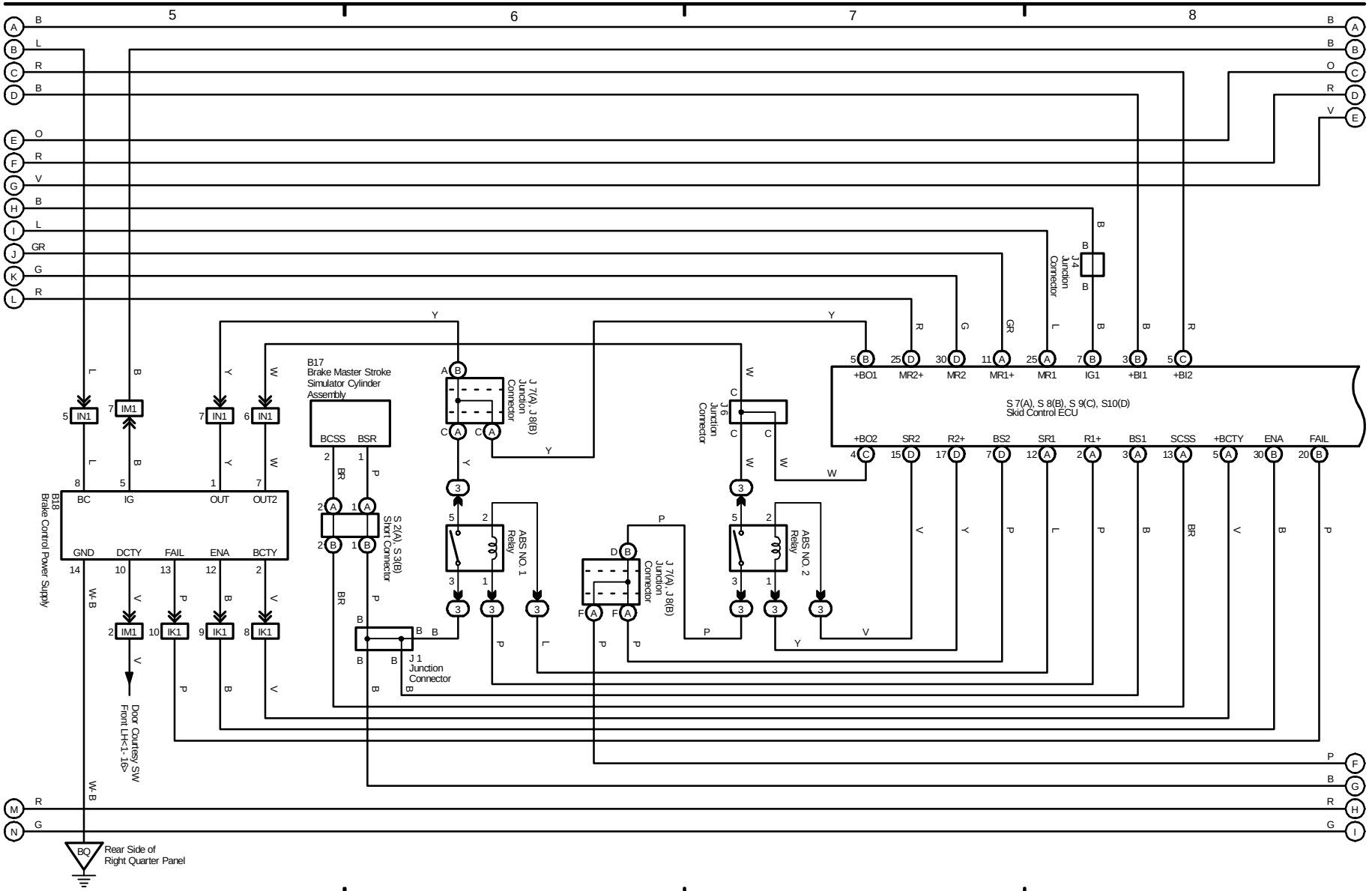

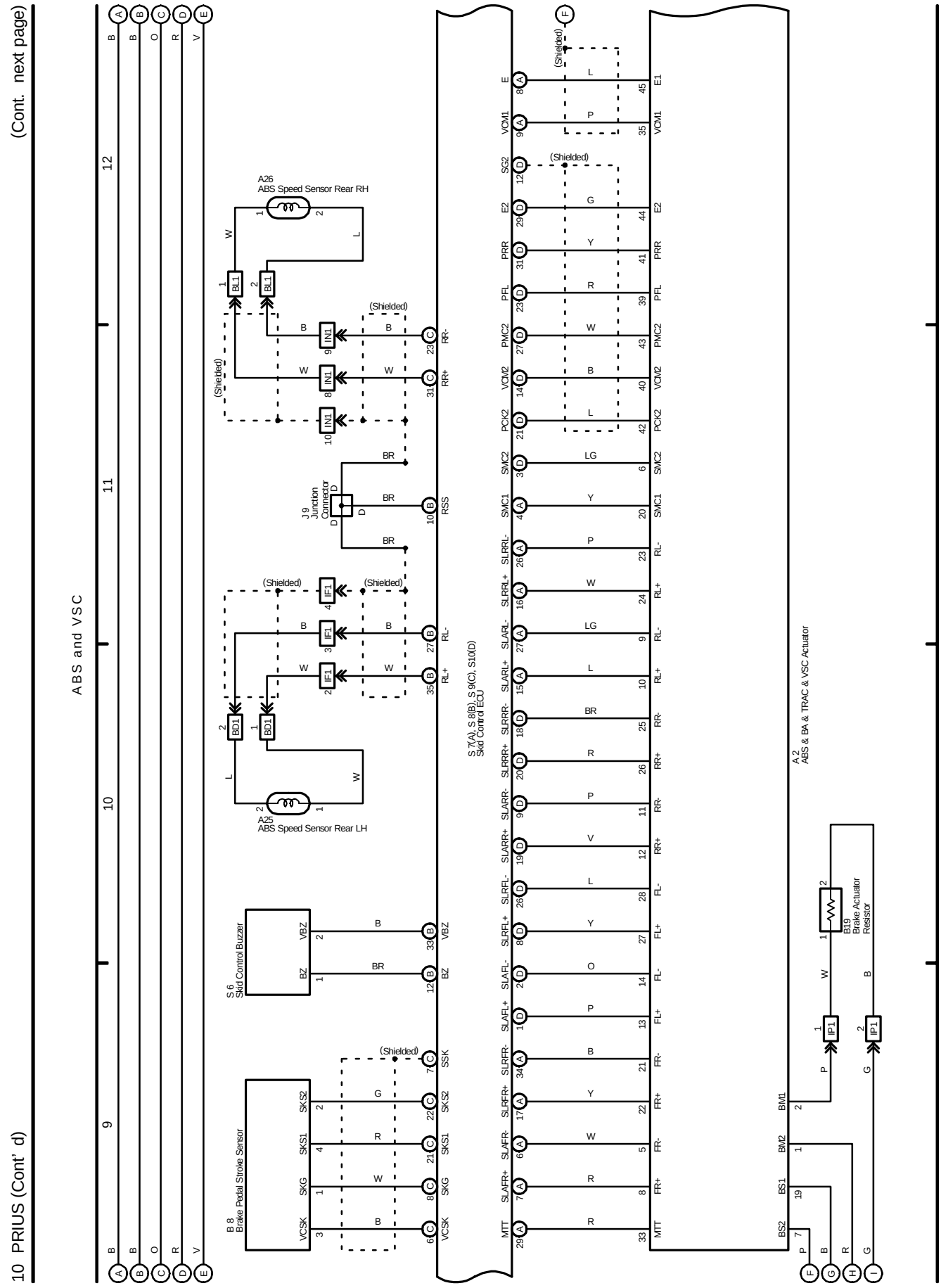
10 PRIUS (Cont' d)
(Cont. next page)
ABS and VSC
A26
ABS Speed Sensor Rear RH
A25
ABS Speed Sensor Rear LH
(Shielded)
J9
Junction
Connector
B 8
Brake Pedal Stroke Sensor
S 6
Skid Control Buzzer
S 7(A), S 8(B), S 9(C), S10(D)
Skid Control ECU
A 2
ABS & BA & TRAC & VSC Actuator
B19
Brake Actuator
Resistor

(Cont. next page)

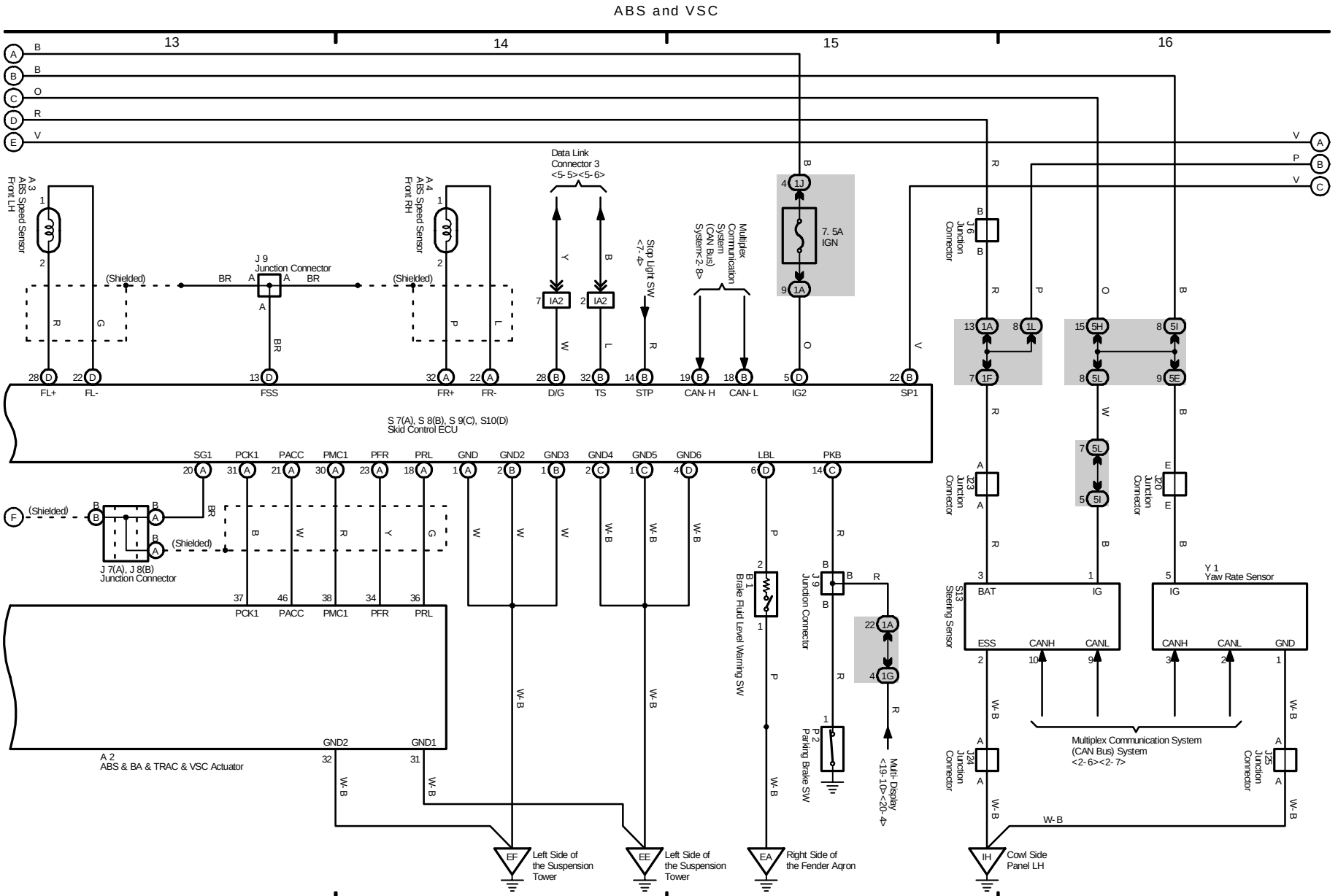

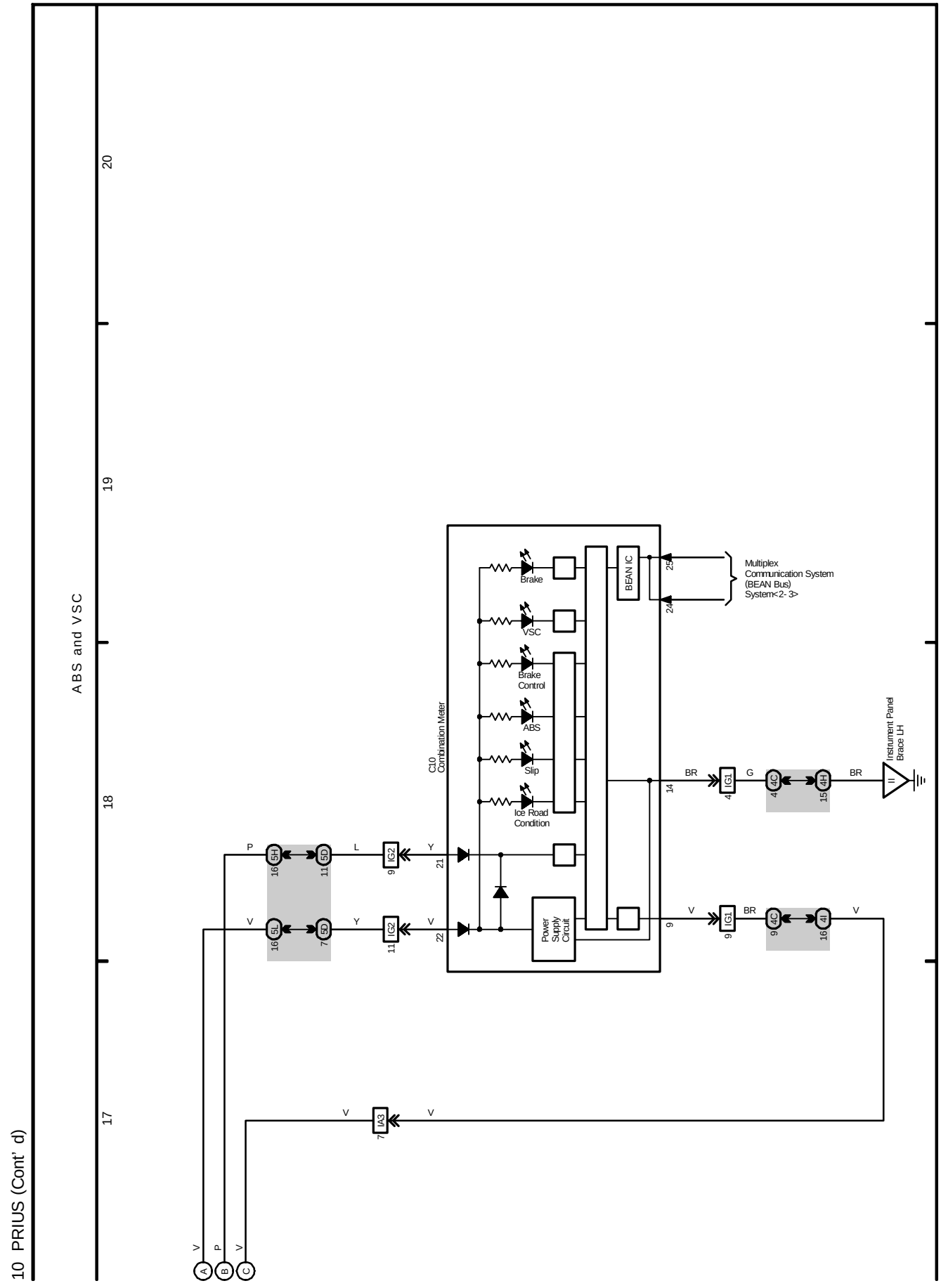
10 PRIUS (Cont' d)
ABS and VSC
17
18
19
20
C10
Combination Meter
Brake
VSC
Brake Control
ABS
Slip
Ice Road Condition
Power Supply Circuit
BEAN IC
Multiplex Communication System (BEAN Bus) System<2- 3>
Instrument Panel Brace LH
IG2
IG1
IA3
BR
G
P
L
Y
V
A
B
C

M OVERALL ELECTRICAL WIRING DIAGRAM

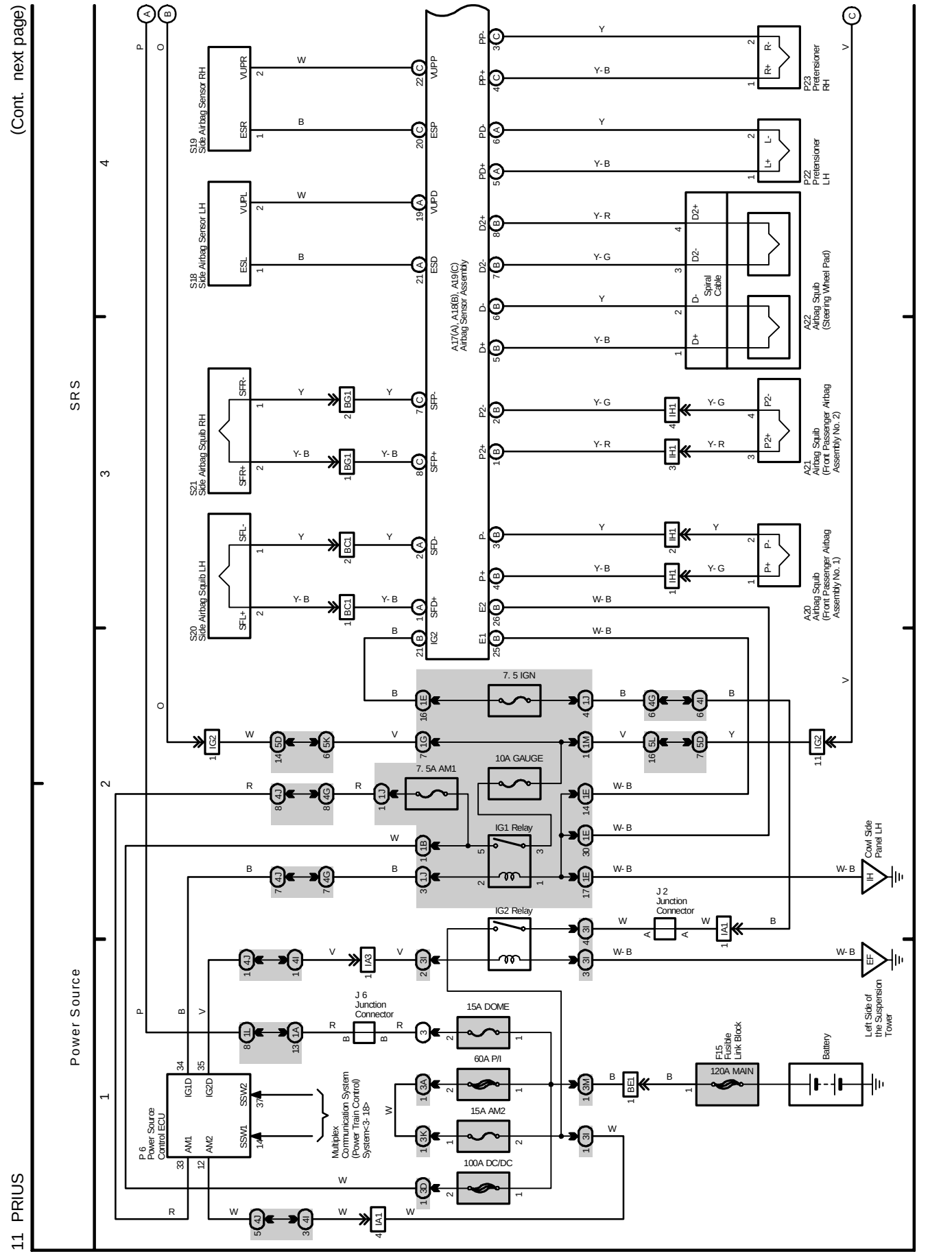

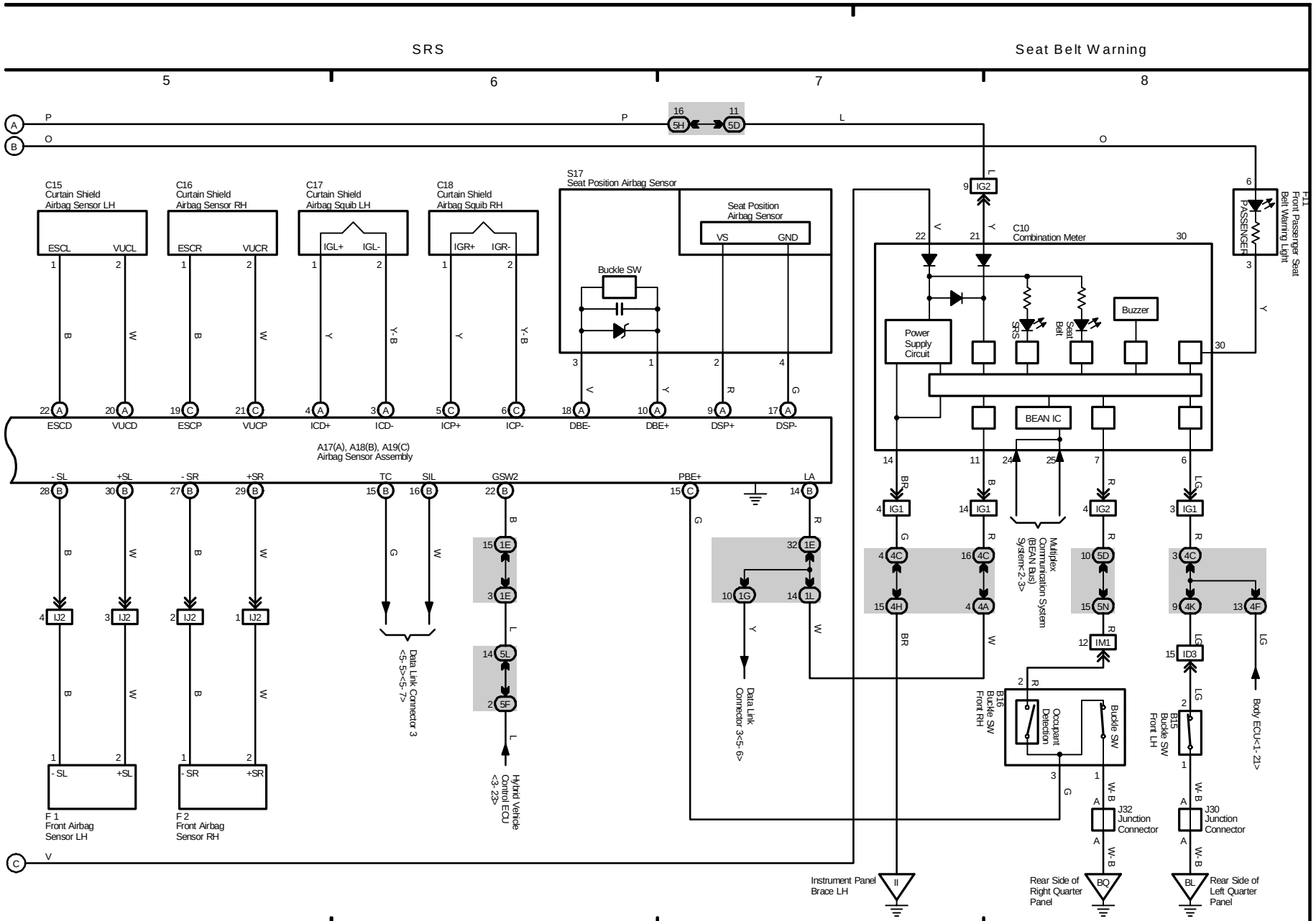
SRS
Seat Belt Warning
5
6
7
8
C15 Curtain Shield Airbag Sensor LH
C16 Curtain Shield Airbag Sensor RH
C17 Curtain Shield Airbag Squib LH
C18 Curtain Shield Airbag Squib RH
S17 Seat Position Airbag Sensor
Seat Position Airbag Sensor
Buckle SW
A17(A), A18(B), A19(C) Airbag Sensor Assembly
F 1 Front Airbag Sensor LH
F 2 Front Airbag Sensor RH
Data Link Connector 3 <5-5><5-7>
Hybrid Vehicle Control ECU <3-23>
Data Link Connector 3<5-6>
C10 Combination Meter
Power Supply Circuit
Buzzer
BEAN IC
Multiplex Communication System (BEAN Bus) System<2-3>
B16 Buckle SW Front RH
B15 Buckle SW Front LH
Occupant Detection
Buckle SW
J32 Junction Connector
J30 Junction Connector
F1 Front Passenger Seat Belt Warning Light
Body ECU<1-21>
Instrument Panel Brace LH
Rear Side of Right Quarter Panel
Rear Side of Left Quarter Panel

M OVERALL ELECTRICAL WIRING DIAGRAM

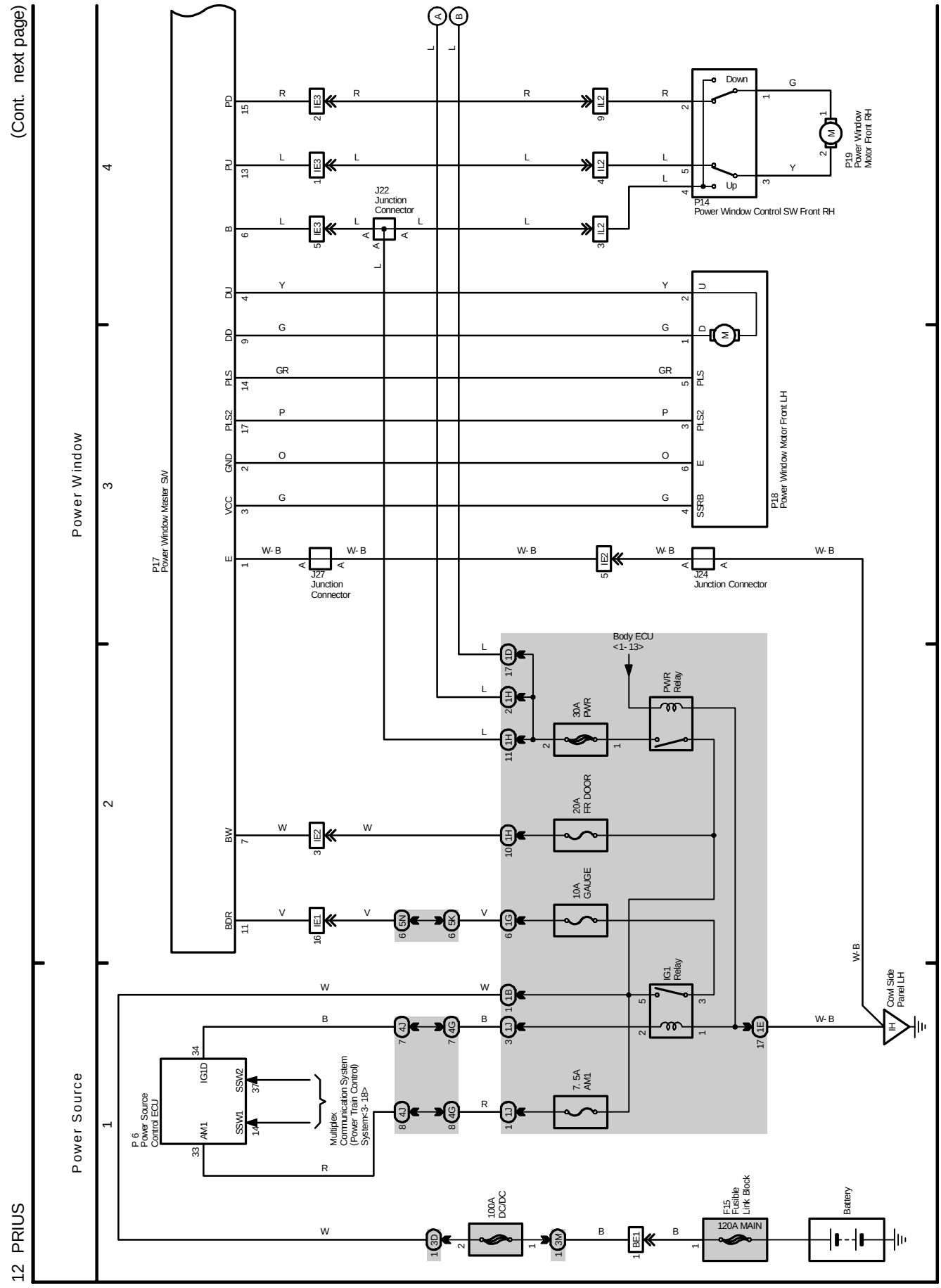

Power Window

5 6 7 8

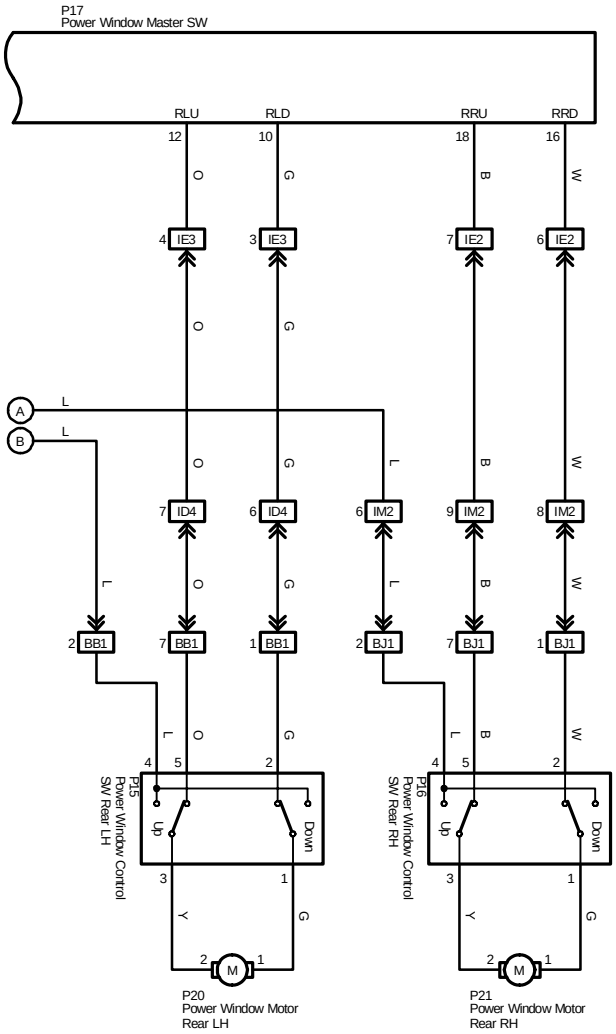

M OVERALL ELECTRICAL WIRING DIAGRAM

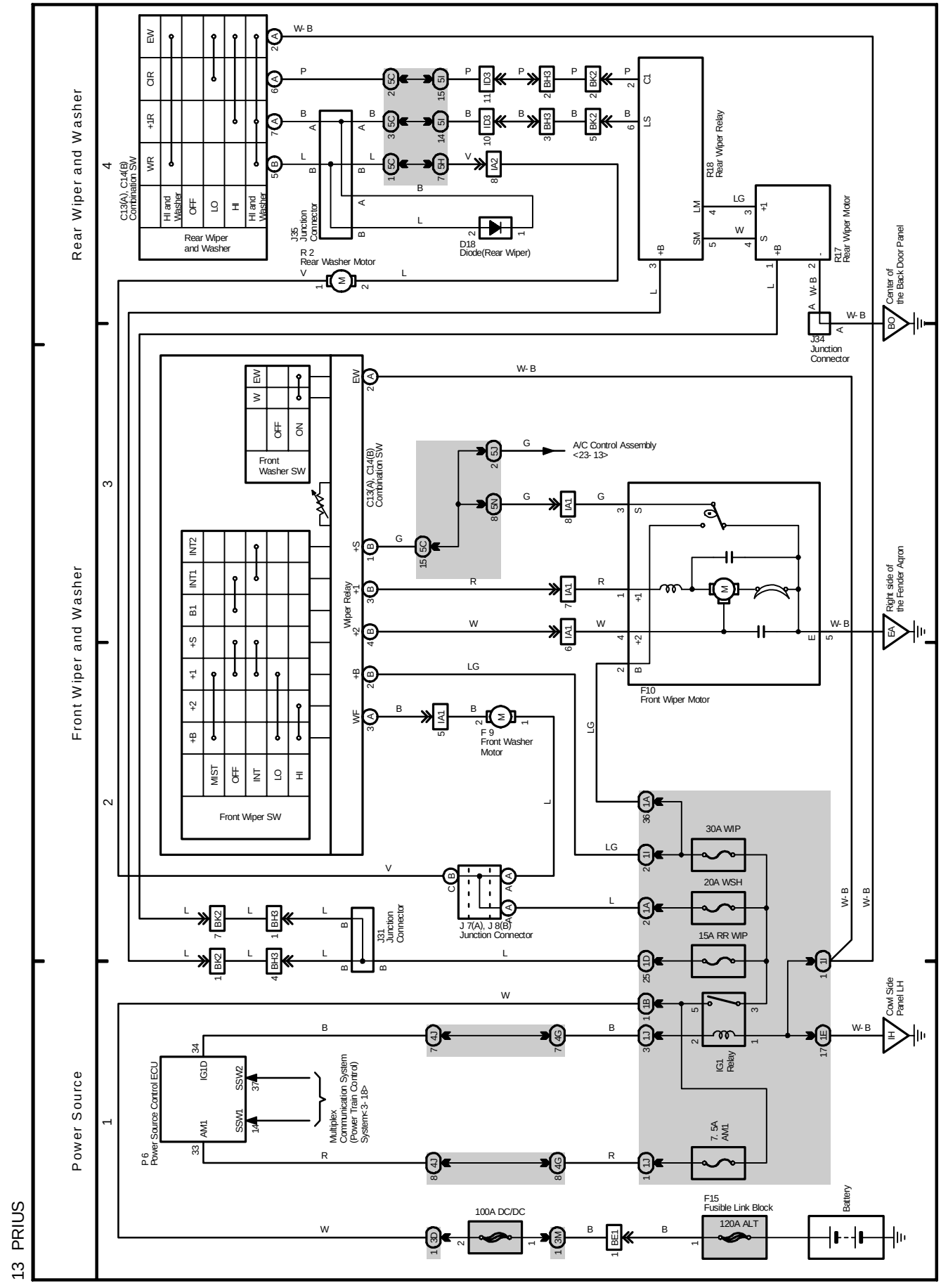

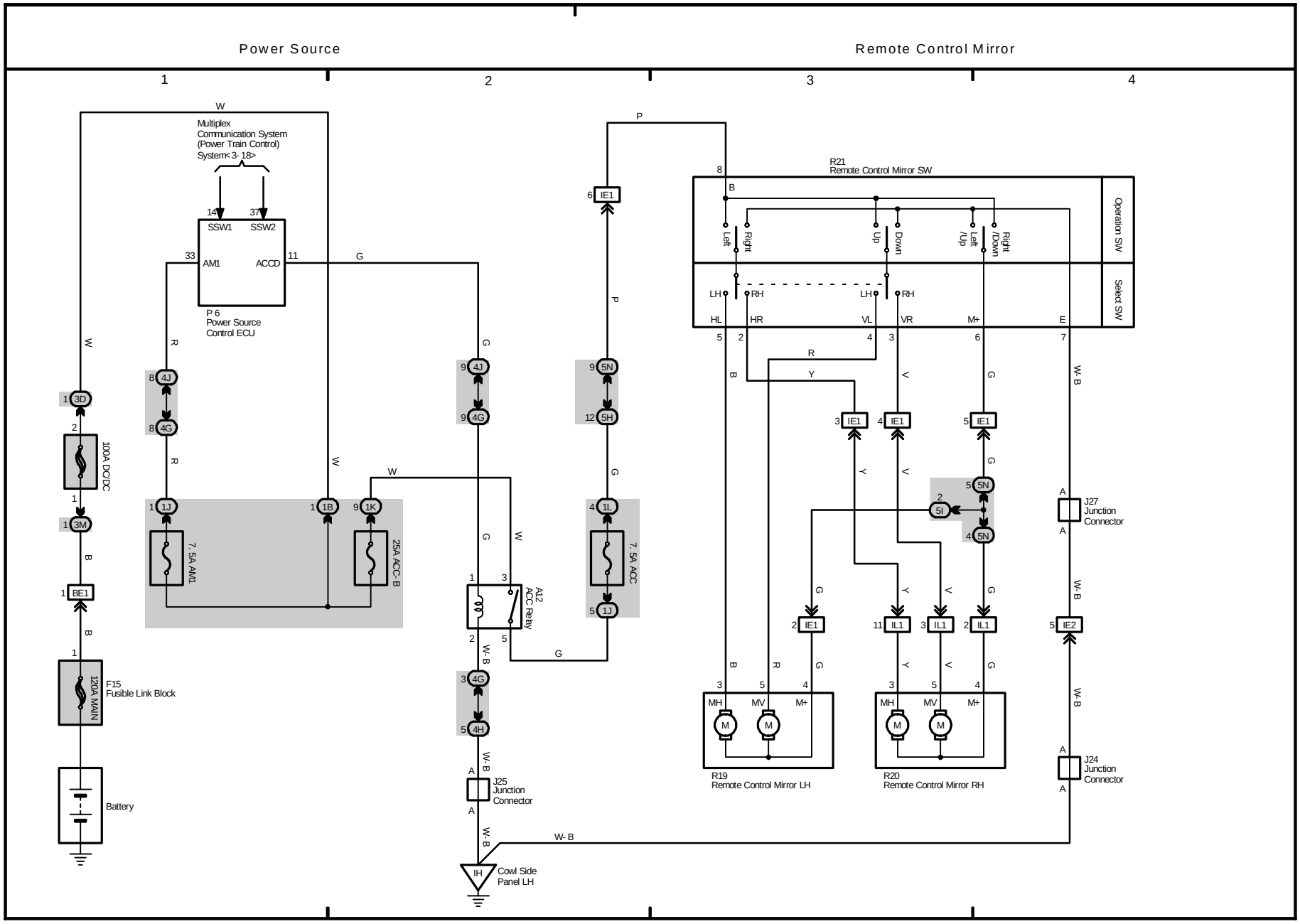
Power Source
Remote Control Mirror
1
2
3
4
Multiplex Communication System (Power Train Control) System<3-18>
SSW1
SSW2
AM1
ACCD
P 6 Power Source Control ECU
100A DC/DC
7.5A AM1
25A ACC-B
7.5A ACC
A12 ACC Relay
F15 Fusible Link Block
120A MAIN
Battery
J25 Junction Connector
Cowl Side Panel LH
R21 Remote Control Mirror SW
Operation SW
Select SW
Left
Right
Up
Down
Left /Up
Right /Down
LH
RH
HL
HR
VL
VR
M+
R19 Remote Control Mirror LH
R20 Remote Control Mirror RH
MH
MV
J27 Junction Connector
J24 Junction Connector

M OVERALL ELECTRICAL WIRING DIAGRAM

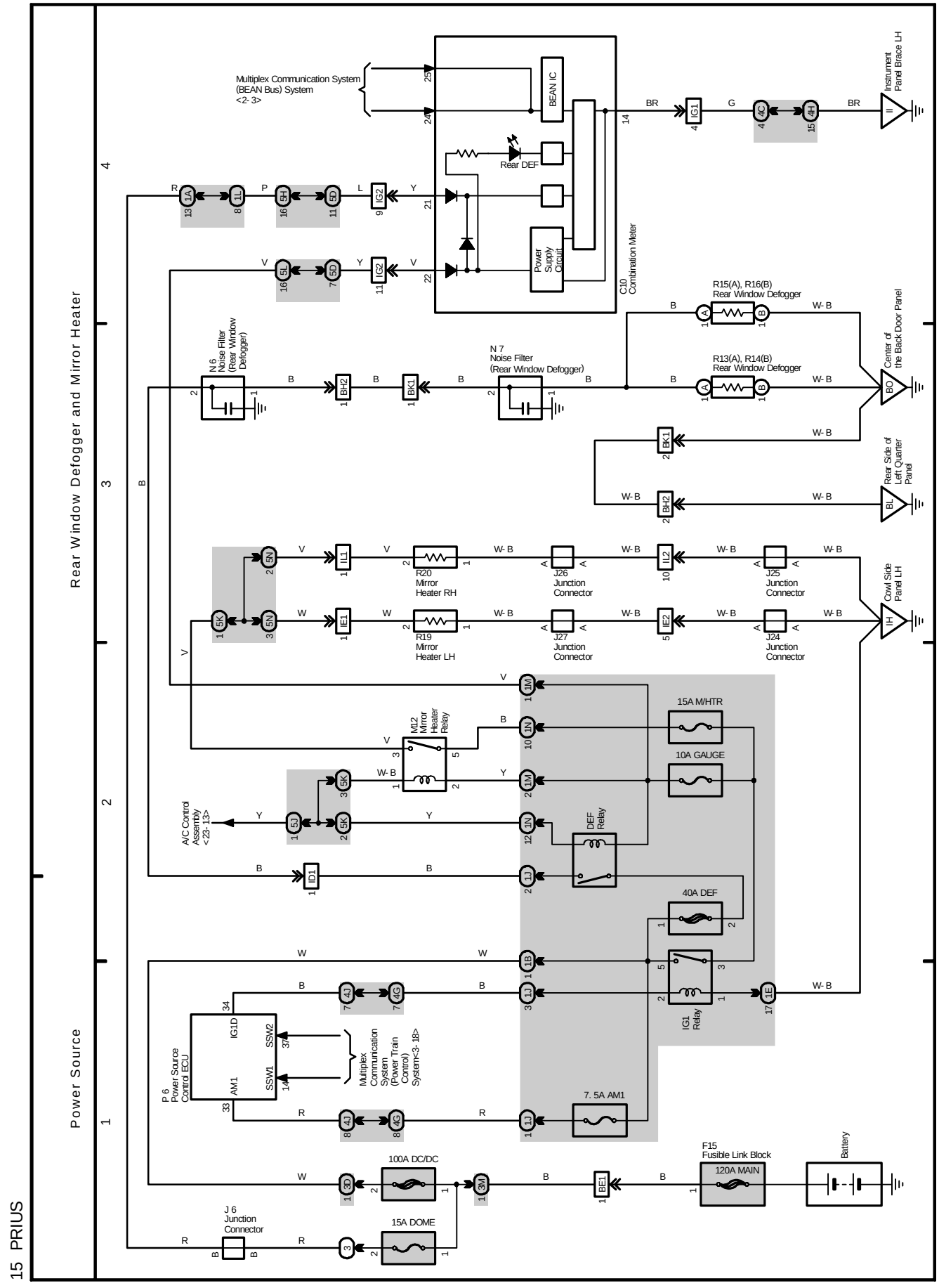

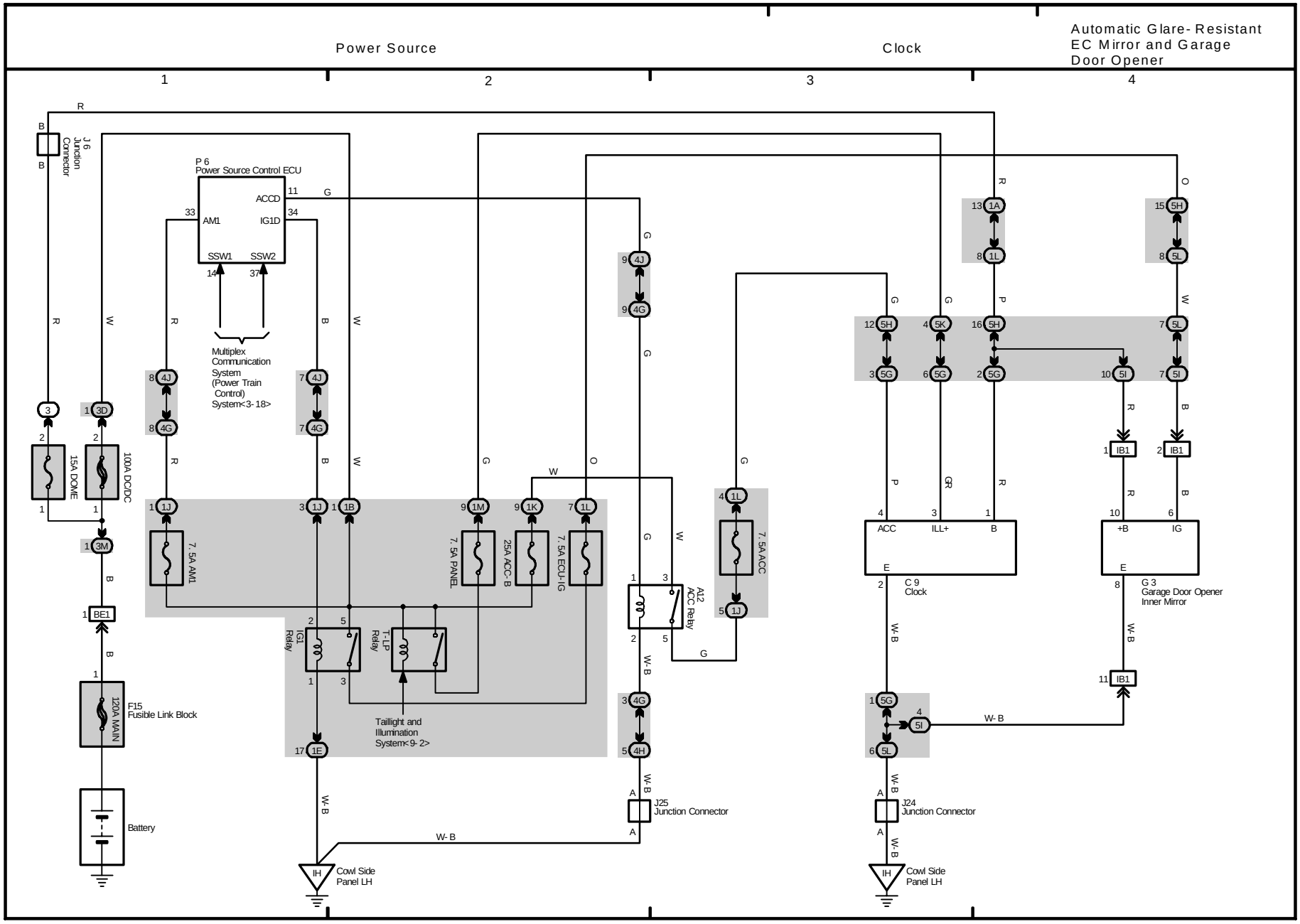
Power Source
Clock
Automatic Glare- Resistant EC Mirror and Garage Door Opener
1
2
3
4
J 6 Junction Connector
P 6 Power Source Control ECU
ACCD
AM1
IG1D
SSW1
SSW2
Multiplex Communication System (Power Train Control) System<3- 18>
15A DOME
100A DC/DC
7. 5A AM1
7. 5A PANEL
25A ACC- B
7. 5A ECU-IG
7. 5A ACC
IG1 Relay
T- LP Relay
A12 ACC Relay
Taillight and Illumination System<9- 2>
120A MAIN
F15 Fusible Link Block
Battery
J25 Junction Connector
J24 Junction Connector
Cowl Side Panel LH
C 9 Clock
G 3 Garage Door Opener Inner Mirror
ACC
ILL+
B
+B
IG

M OVERALL ELECTRICAL WIRING DIAGRAM

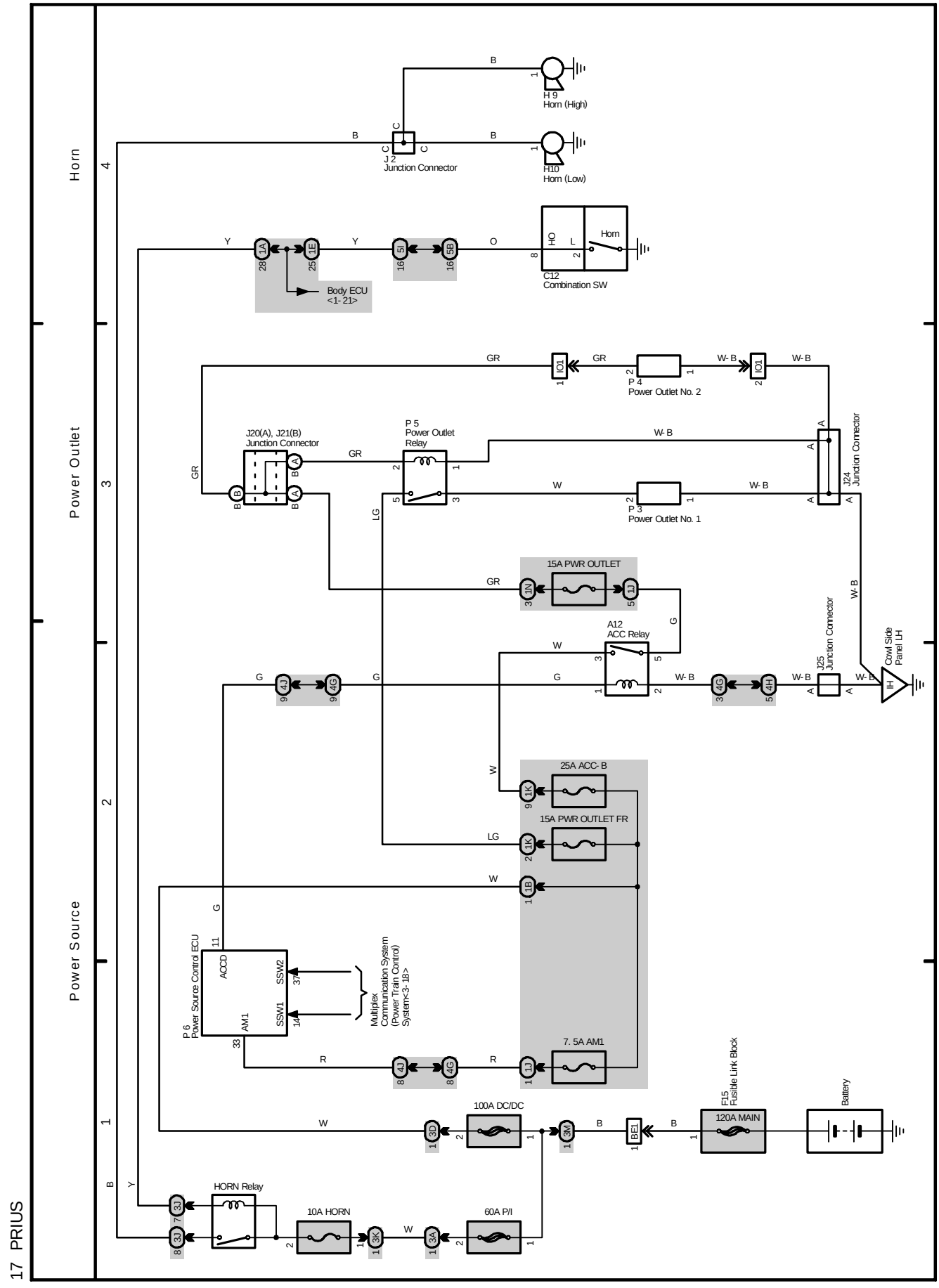

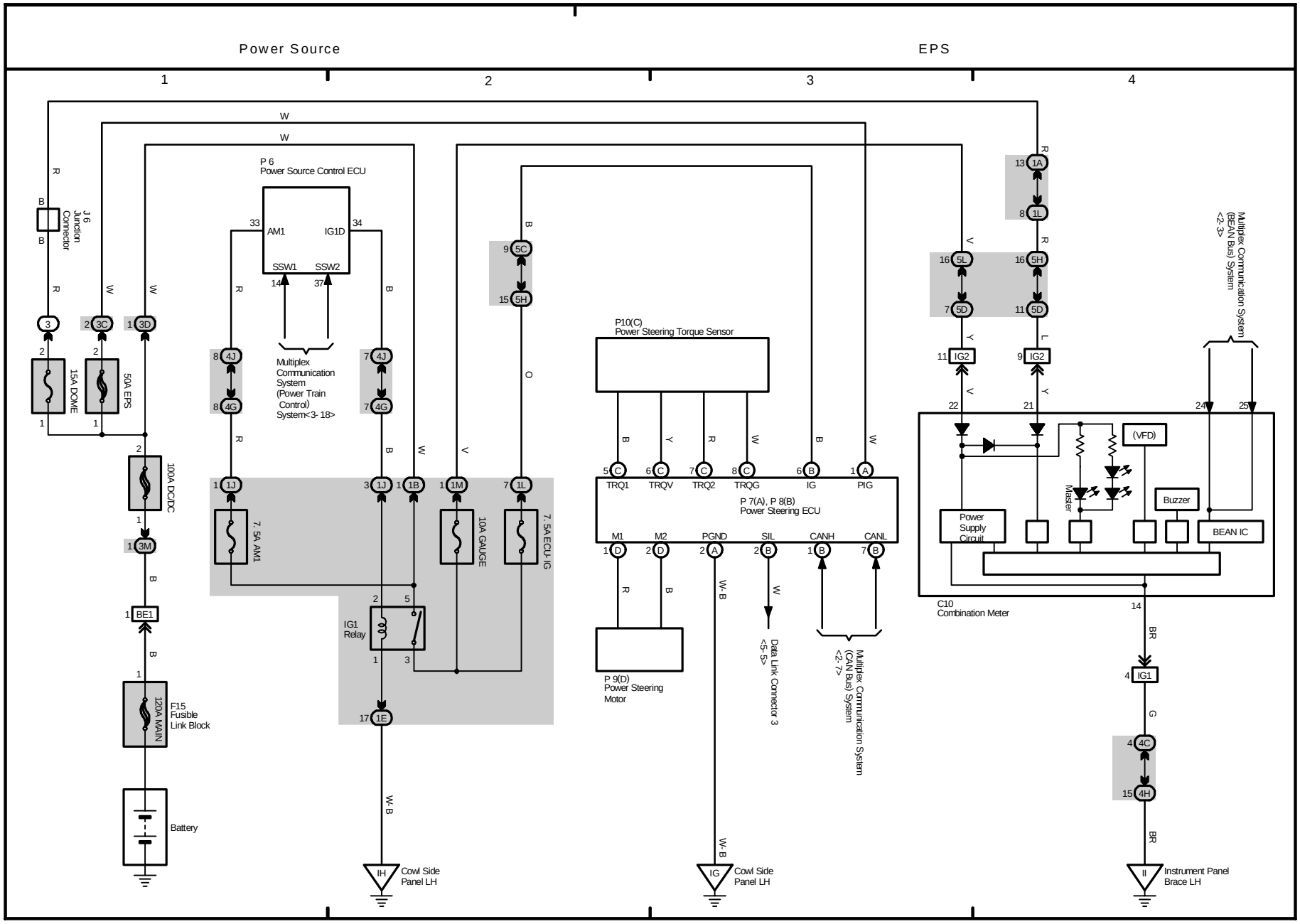
Power Source
EPS
1
2
3
4
P 6
Power Source Control ECU
AM1
IG1D
SSW1
SSW2
Multiplex Communication System (Power Train Control) System<3- 18>
J 6 Junction Connector
15A DOME
50A EPS
100A DC/DC
120A MAIN
F15 Fusible Link Block
Battery
7. 5A AM1
10A GAUGE
7. 5A ECU- IG
IG1 Relay
Cowl Side Panel LH
P10(C)
Power Steering Torque Sensor
TRQ1
TRQV
TRQ2
TRQG
IG
PIG
P 7(A), P 8(B)
Power Steering ECU
M1
M2
PGND
SIL
CANH
CANL
P 9(D)
Power Steering Motor
Data Link Connector 3 <5- 5>
Multiplex Communication System (CAN Bus) System <2- 7>
C10
Combination Meter
(VFD)
Master
Buzzer
Power Supply Circuit
BEAN IC
Multiplex Communication System (BEAN Bus) System <2- 3>
Instrument Panel Brace LH

M OVERALL ELECTRICAL WIRING DIAGRAM

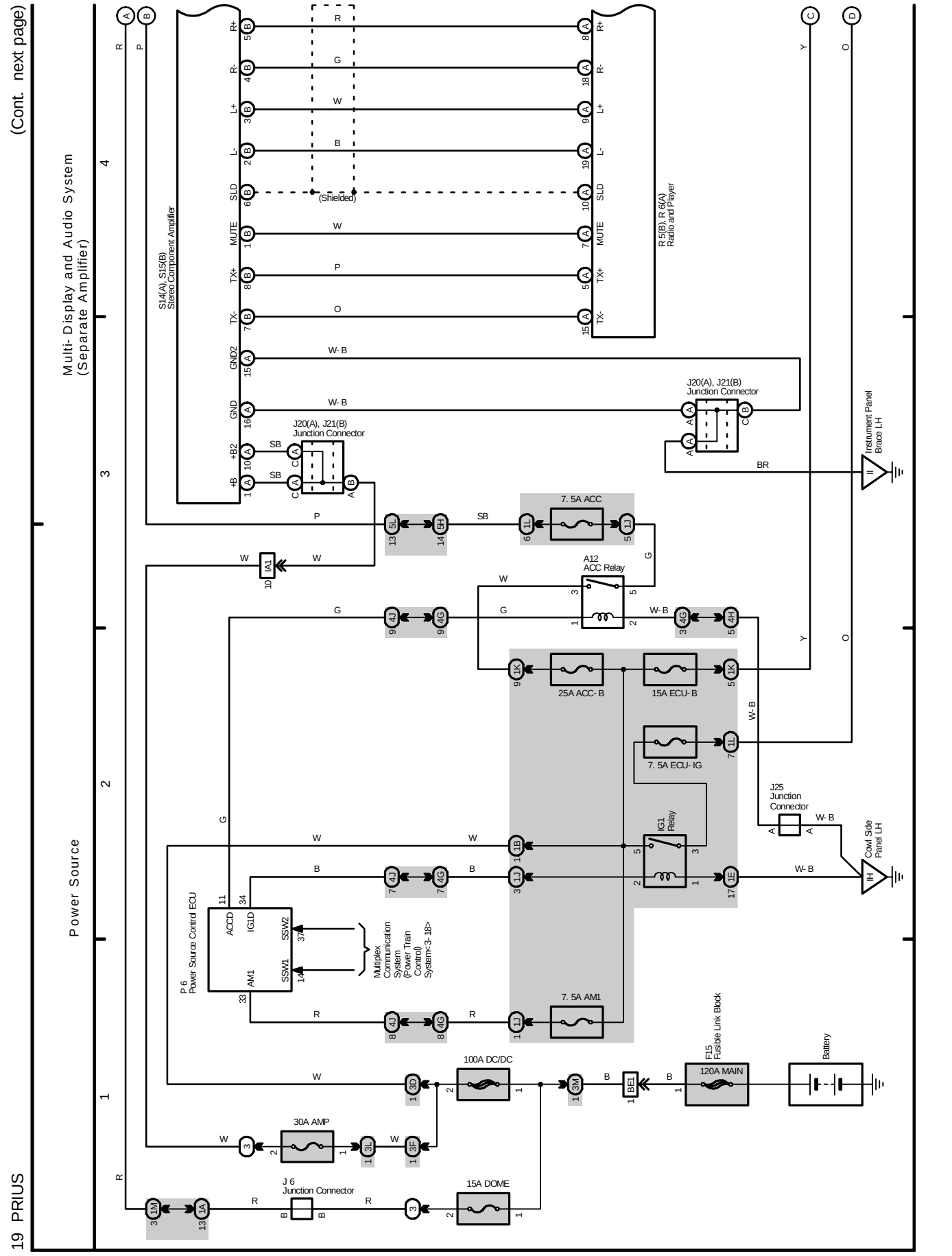

(Cont. next page)

Multi- Display and Audio System (Separate Amplifier)

* 1 : w/ Navigation System
* 2 : w/o Navigation System

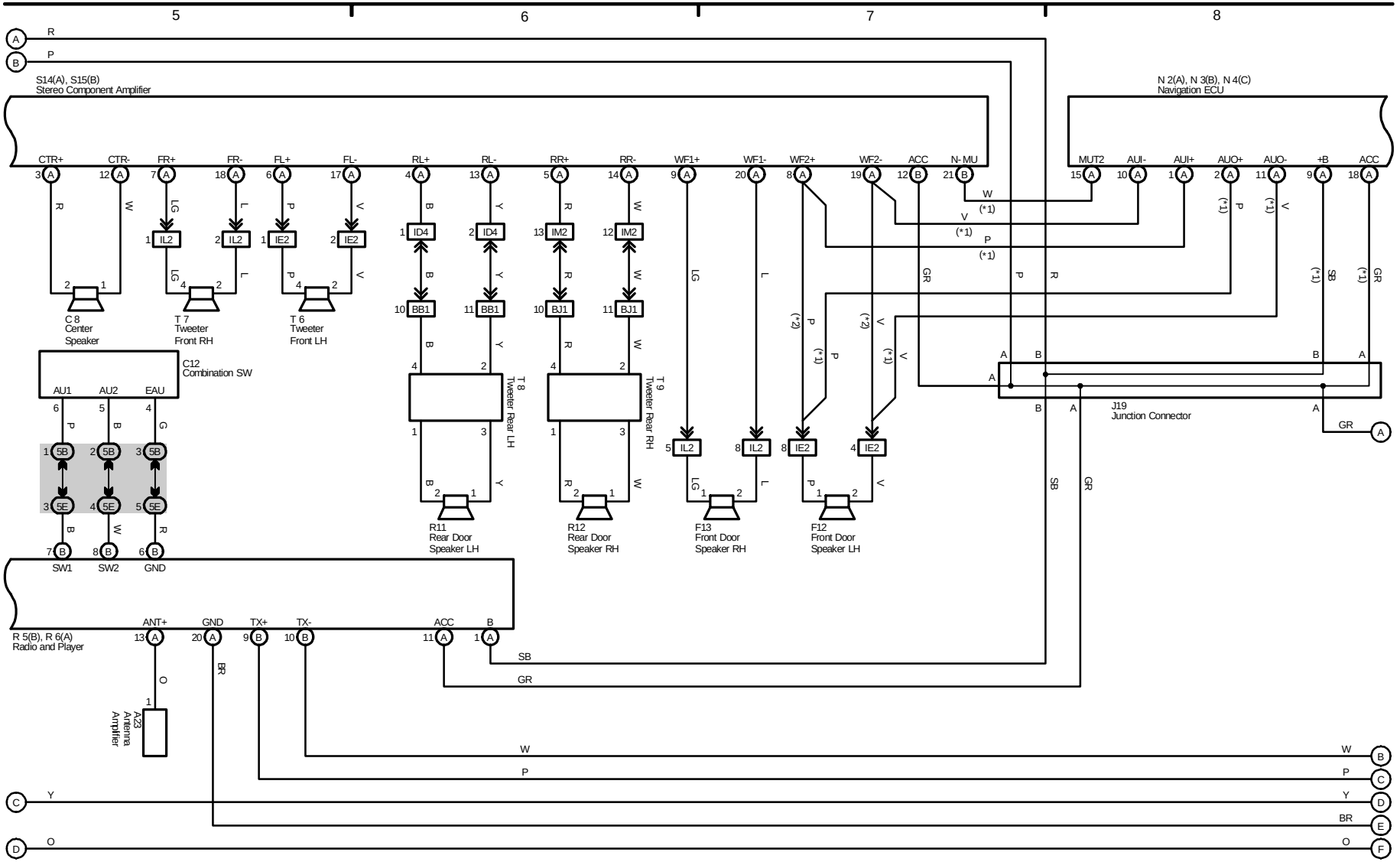

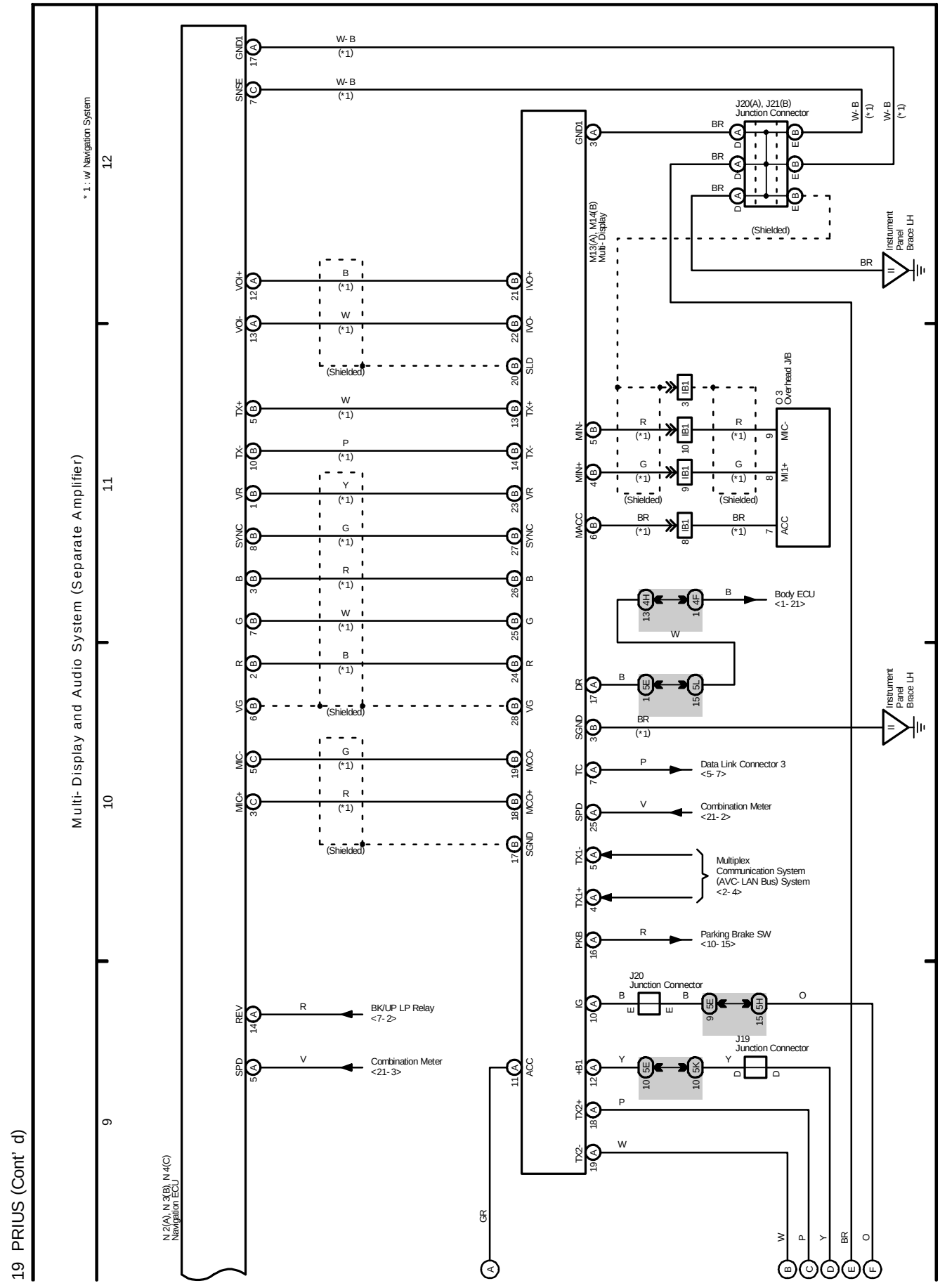
19 PRIUS (Cont' d)
Multi- Display and Audio System (Separate Amplifier)
* 1 : w/ Navigation System
N 2(A), N 3(B), N 4(C)
Navigation ECU
M13(A), M14(B)
Multi- Display
J20(A), J21(B)
Junction Connector
J20
Junction Connector
J19
Junction Connector
O 3
Overhead J/B
Instrument
Panel
Brace LH
Body ECU
<1- 21>
Data Link Connector 3
<5- 7>
Combination Meter
<21- 2>
Multiplex
Communication System
(AVC- LAN Bus) System
<2- 4>
Parking Brake SW
<10- 15>
BK/UP LP Relay
<7- 2>
Combination Meter
<21- 3>
(Shielded)

M OVERALL ELECTRICAL WIRING DIAGRAM

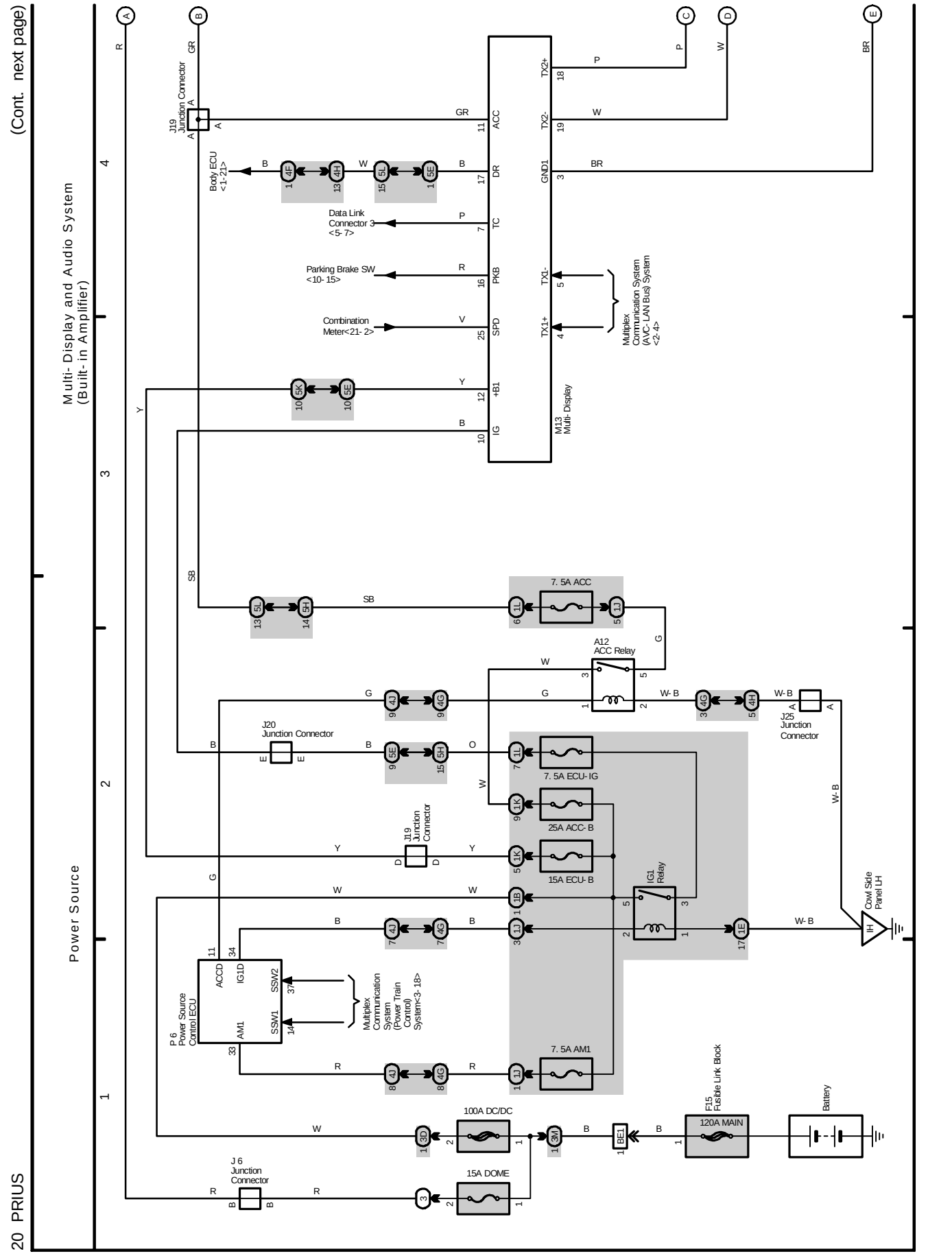

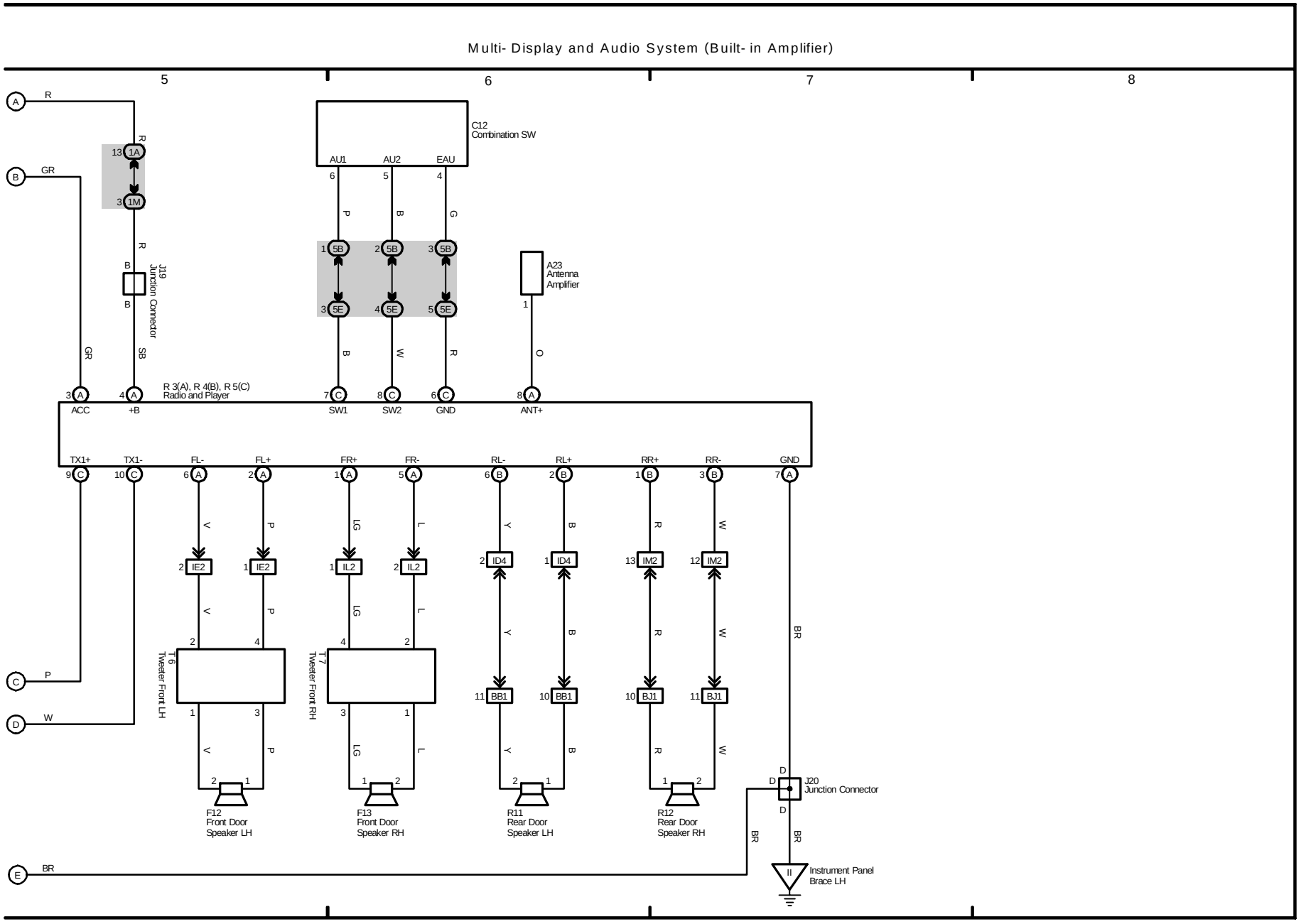
Multi- Display and Audio System (Built- in Amplifier)
5
6
7
8
C12
Combination SW
AU1
AU2
EAU
A23
Antenna
Amplifier
J19
Junction Connector
R 3(A), R 4(B), R 5(C)
Radio and Player
ACC
+B
SW1
SW2
GND
ANT+
TX1+
TX1-
FL-
FL+
FR+
FR-
RL-
RL+
RR+
RR-
GND
T6
Tweeter Front LH
T7
Tweeter Front RH
F12
Front Door
Speaker LH
F13
Front Door
Speaker RH
R11
Rear Door
Speaker LH
R12
Rear Door
Speaker RH
J20
Junction Connector
Instrument Panel
Brace LH

M OVERALL ELECTRICAL WIRING DIAGRAM

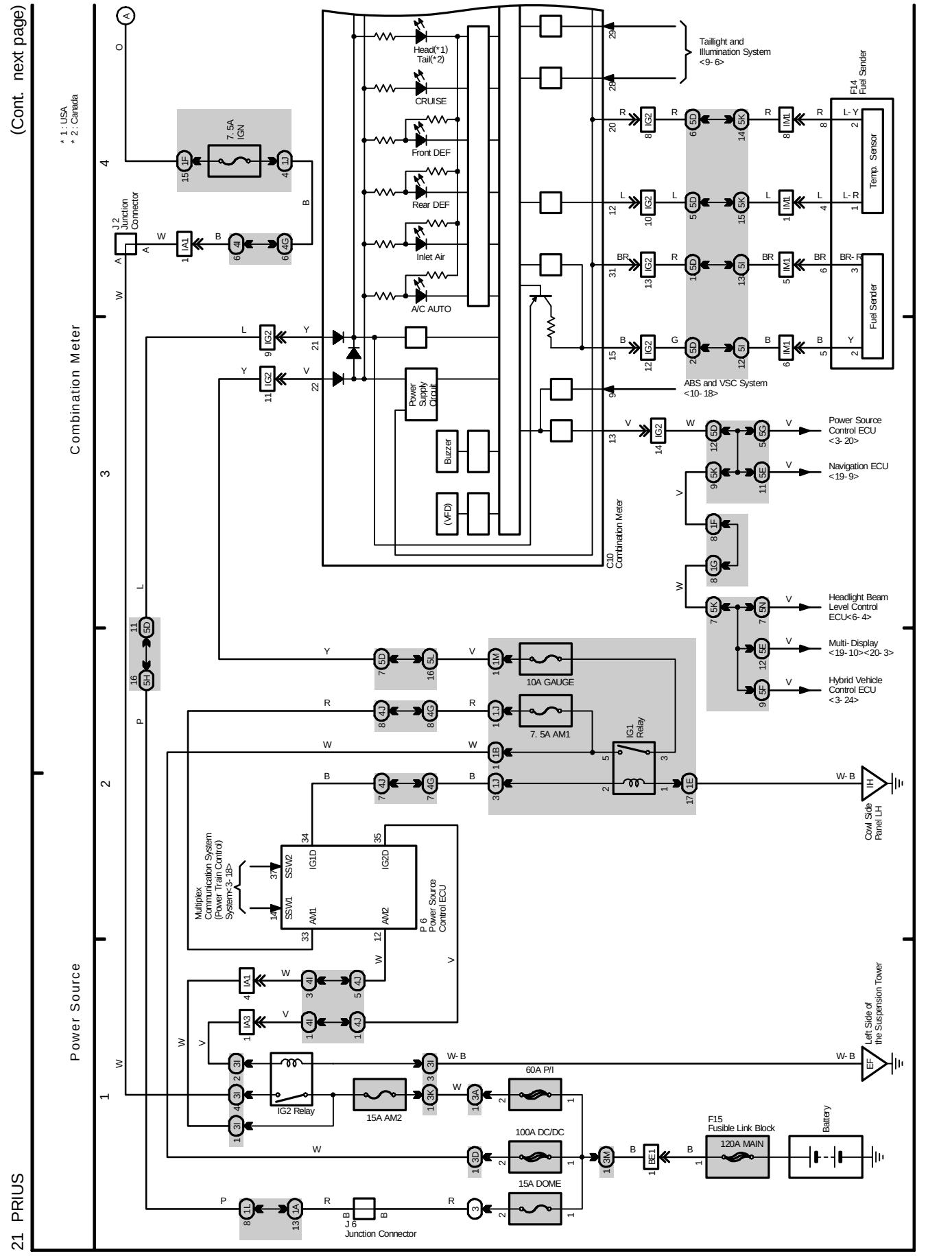

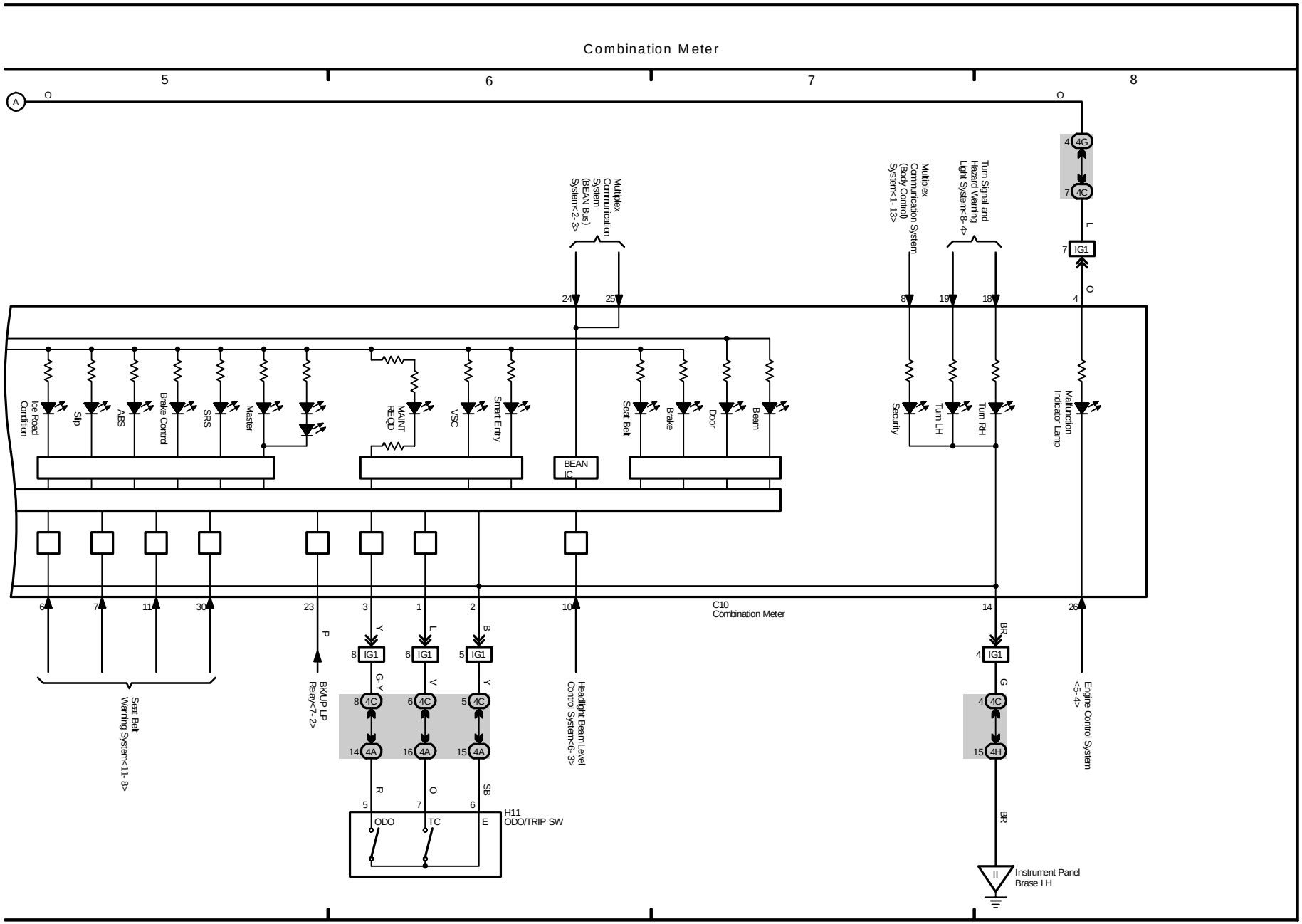
Combination Meter
5
6
7
8
A
O
Multiplex Communication System (BEAN Bus) System<2- 3>
Multiplex Communication System (Body Control) System<1- 13>
Turn Signal and Hazard Warning Light System<8- 4>
4G
4C
L
IG1
O
24
25
8
19
18
4
Ice Road Condition
Slip
ABS
Brake Control
SRS
Master
MAINT REQD
VSC
Smart Entry
BEAN IC
Seat Belt
Brake
Door
Beam
Security
Turn LH
Turn RH
Malfunction Indicator Lamp
C10
Combination Meter
6
7
11
30
23
3
1
2
10
14
26
P
Y
L
B
BR
G-Y
V
Y
G
8
6
5
4
14
16
15
4A
4H
R
O
SB
BR
5
7
6
H11
ODO/TRIP SW
ODO
TC
E
Seat Belt Warning System<11- 8>
BK/UP LP Relay<7- 2>
Headlight Beam Level Control System<6- 3>
Engine Control System <5- 4>
Instrument Panel Brase LH

M OVERALL ELECTRICAL WIRING DIAGRAM

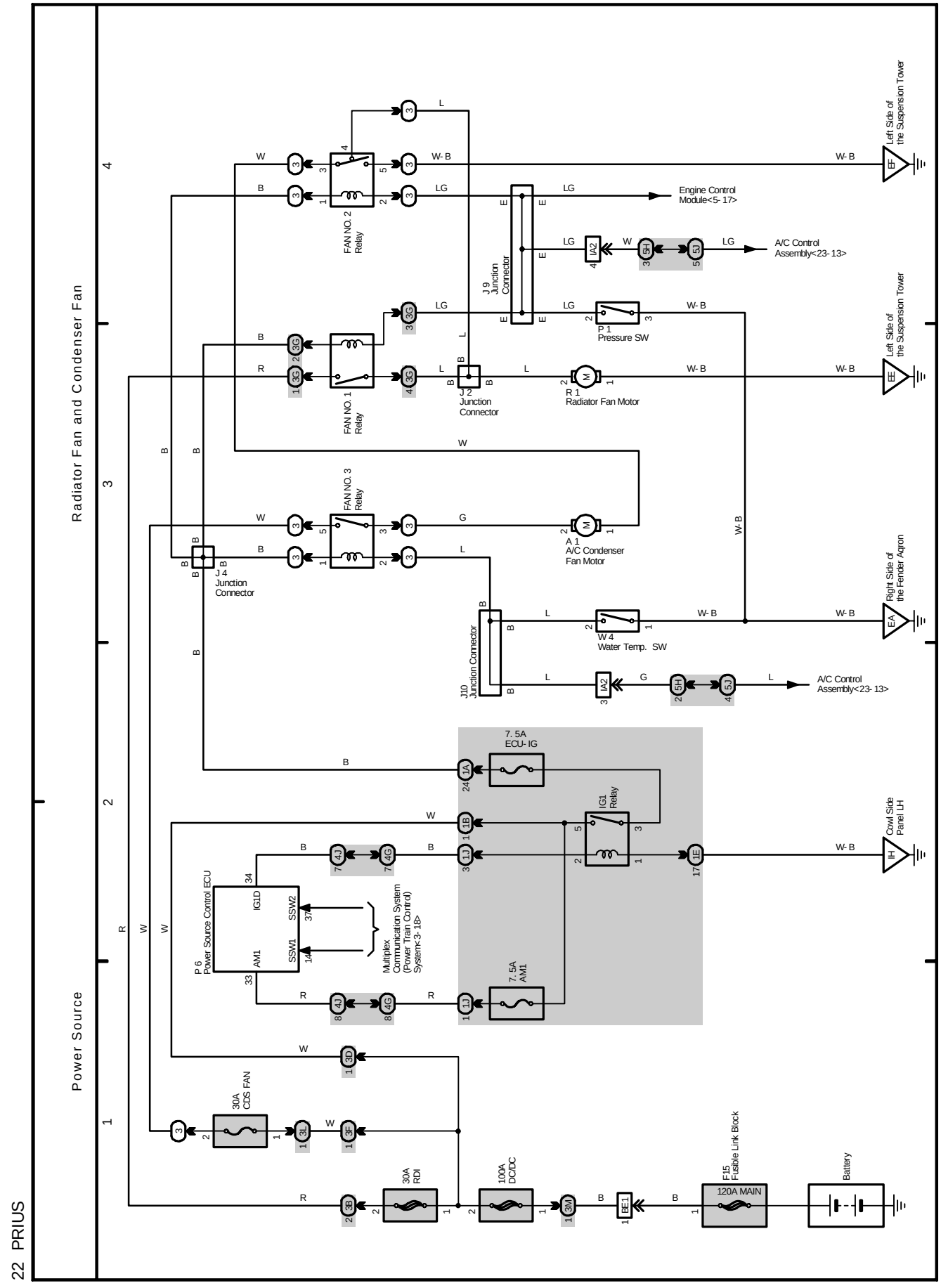

M OVERALL ELECTRICAL WIRING DIAGRAM

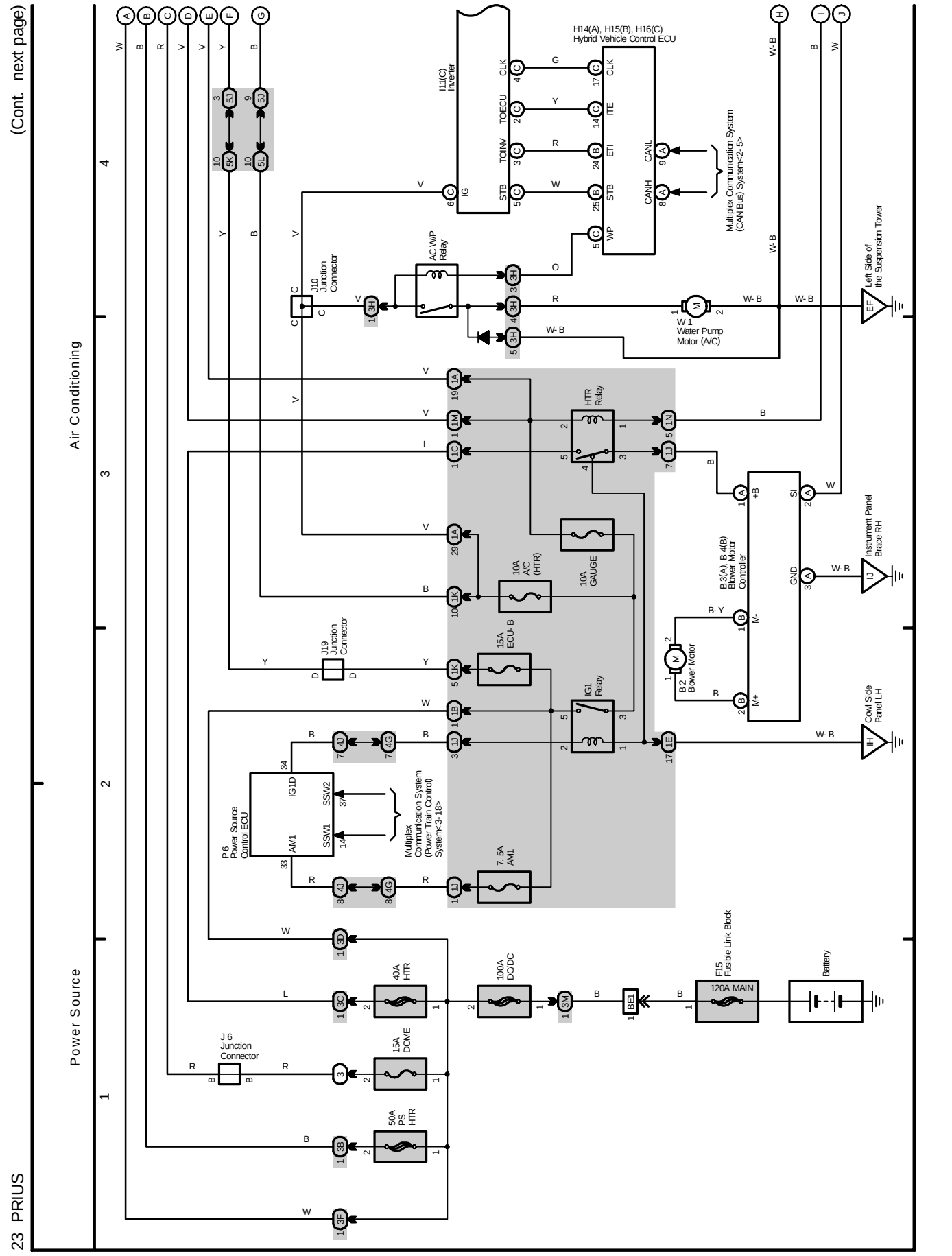

Air Conditioning

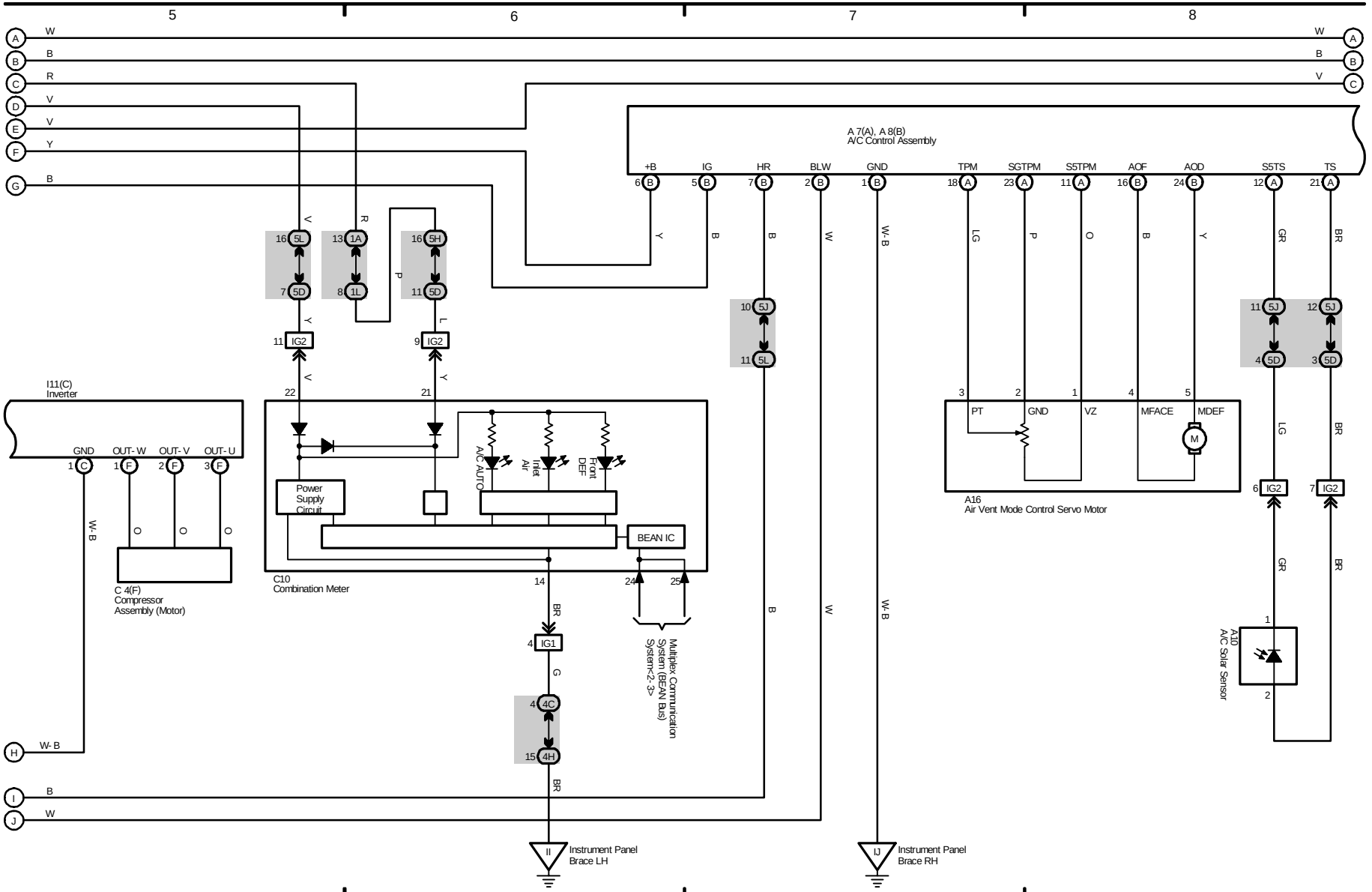

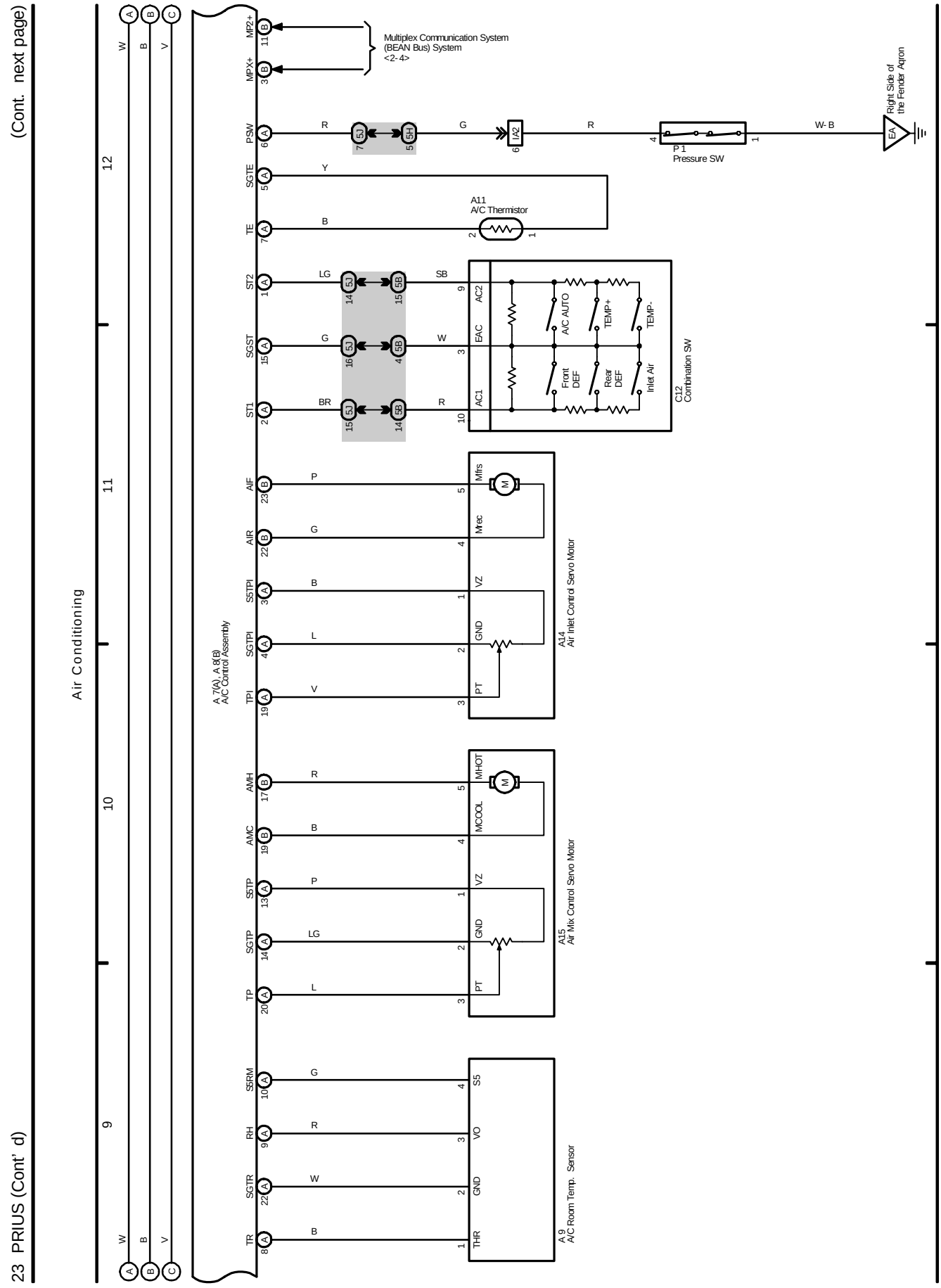
(Cont. next page)
23 PRIUS (Cont' d)
Air Conditioning
A 7(A), A 8(B)
A/C Control Assembly
Multiplex Communication System
(BEAN Bus) System
<2- 4>
MP2+
MPX+
PSW
SGTE
TE
ST2
SGST
ST1
AIF
AIR
S5TPI
SGTPI
TPI
AMH
AMC
S5TP
SGTP
TP
S5RM
RH
SGTR
TR
Right Side of
the Fender Apron
P 1
Pressure SW
A11
A/C Thermistor
C12
Combination SW
AC2
EAC
AC1
A/C AUTO
TEMP+
TEMP-
Front
DEF
Rear
DEF
Inlet Air
A14
Air Inlet Control Servo Motor
Mfrs
Mrec
VZ
GND
PT
A15
Air Mix Control Servo Motor
MHOT
MCOOL
A 9
A/C Room Temp. Sensor
S5
VO
GND
THR

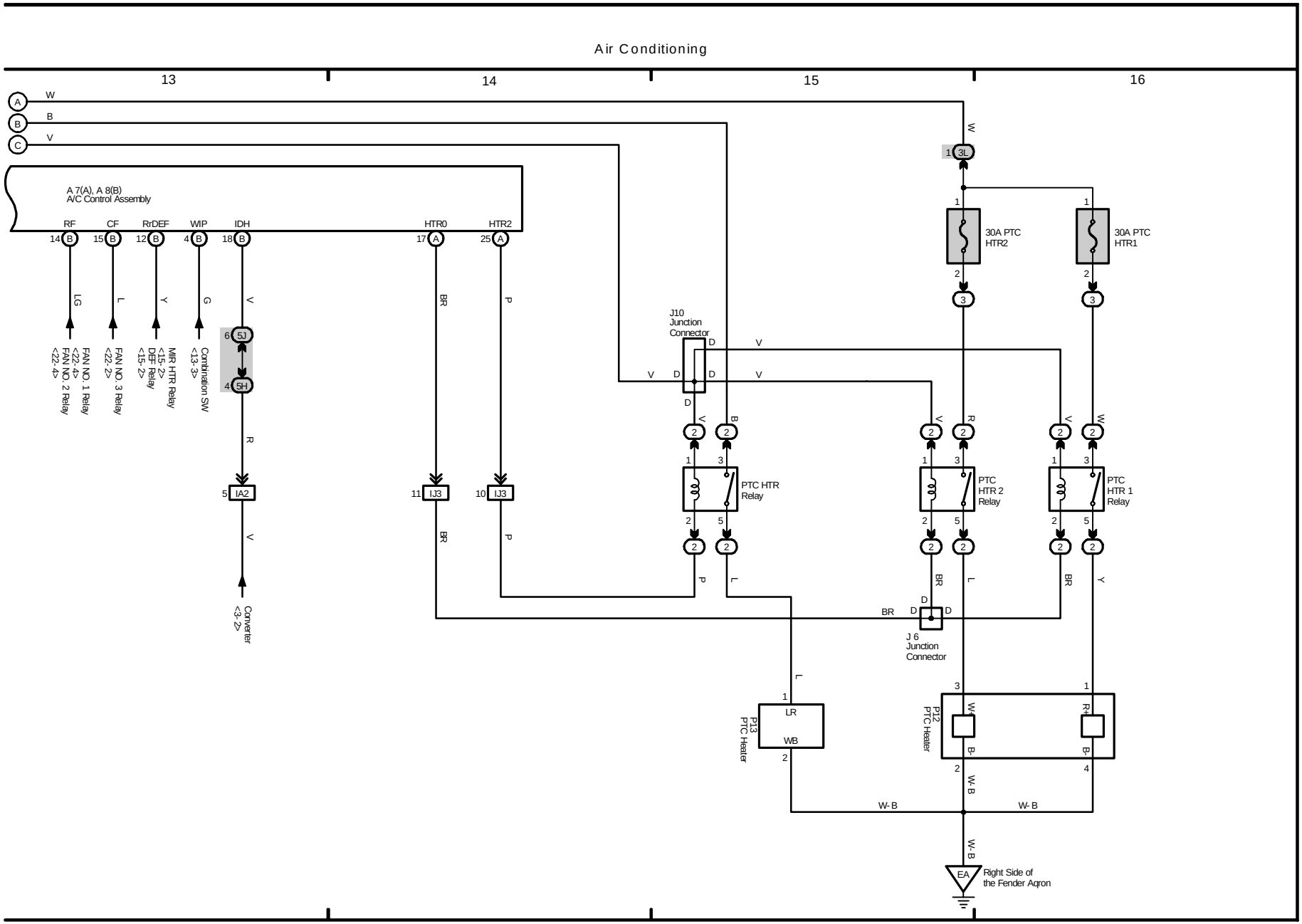
Air Conditioning
13
14
15
16
A
B
C
W
B
V
A 7(A), A 8(B)
A/C Control Assembly
RF
CF
RrDEF
WIP
IDH
HTR0
HTR2
14 B
15 B
12 B
4 B
18 B
17 A
25 A
LG
L
Y
G
V
BR
P
FAN NO. 2 Relay
<22- 4>
FAN NO. 1 Relay
<22- 4>
FAN NO. 3 Relay
<22- 2>
MIR HTR Relay
<15- 2>
DEF Relay
<15- 2>
Combination SW
<13- 3>
6 5J
4 5H
R
5 IA2
V
Converter
<3- 2>
11 IJ3
10 IJ3
BR
P
J10
Junction
Connector
D
V
B
PTC HTR
Relay
L
J 6
Junction
Connector
W
1 3L
30A PTC
HTR2
30A PTC
HTR1
R
PTC
HTR 2
Relay
PTC
HTR 1
Relay
Y
P13
PTC Heater
LR
WB
P12
PTC Heater
W-B
B-
R-
EA
Right Side of
the Fender Aqron

Position of Parts in Engine Compartment

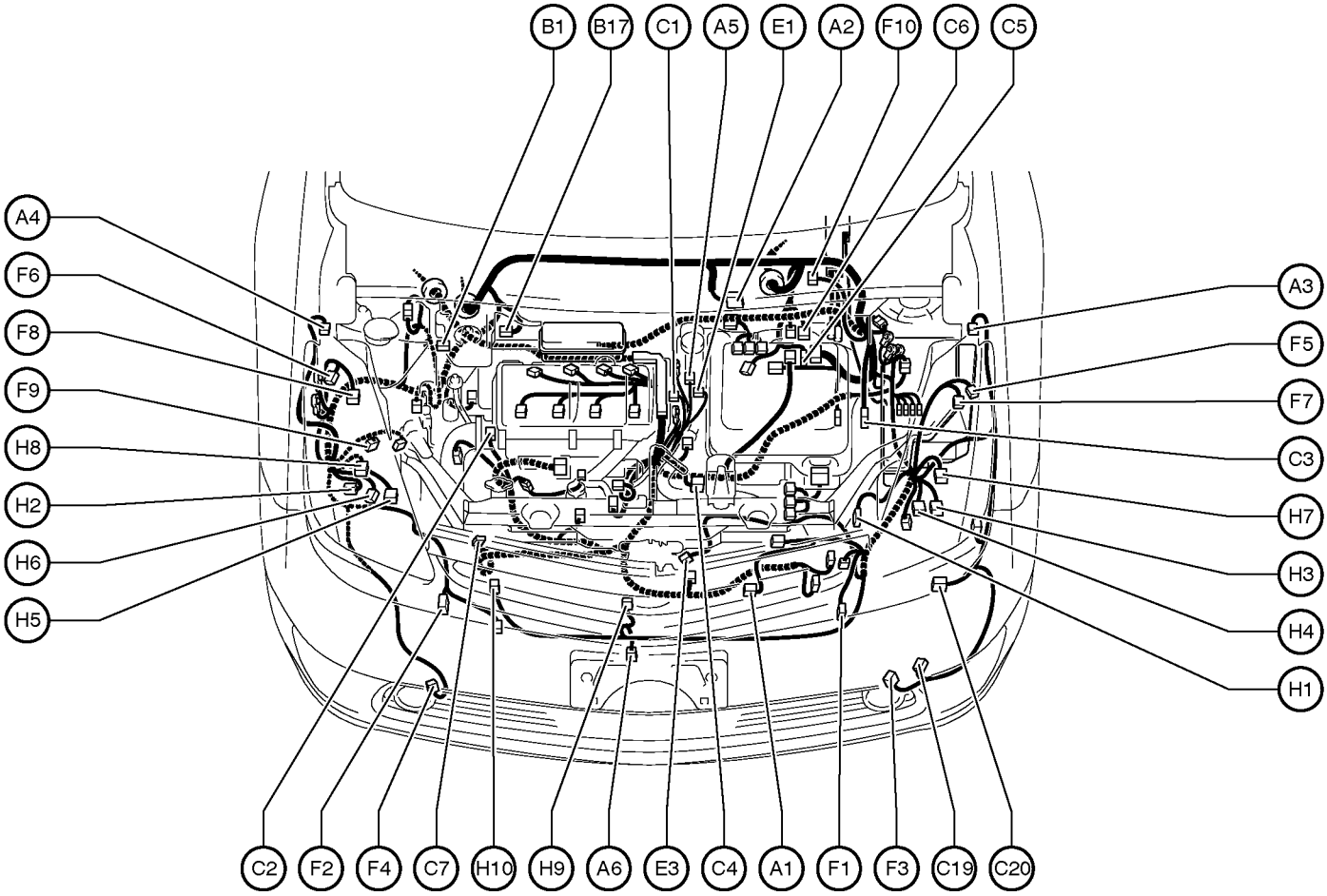

A 1 A/C Condenser Fan Motor
A 2 ABS & BA & TRAC & VSC Actuator
A 3 ABS Speed Sensor Front LH
A 4 ABS Speed Sensor Front RH
A 5 Air Fuel Ratio Sensor (Bank 1 Sensor 1)
A 6 Ambient Temp. Sensor

B 1 Brake Fluid Level Warning SW
B17 Brake Master Stroke Simulator Cylinder Assembly

C 1 Camshaft Position Sensor
C 2 Camshaft Timing Oil Control Valve
C 3 Circuit Breaker Sensor
C 4 Compressor Assembly (Motor)
C 5 Converter
C 6 Converter
C 7 Crankshaft Position Sensor
C19 Coolant Heat Storage Tank Outlet Temp. Sensor
C20 Coolant Heat Storage Water Pump

E 1 Engine Coolant Temp. Sensor
E 3 Engine Hood Courtesy SW

F 1 Front Airbag Sensor LH
F 2 Front Airbag Sensor RH
F 3 Front Fog Light LH
F 4 Front Fog Light RH
F 5 Front Side Marker Light LH
F 6 Front Side Marker Light RH
F 7 Front Turn Signal Light LH
F 8 Front Turn Signal Light RH
F 9 Front Washer Motor
F10 Front Wiper Motor

H 1 Headlight Beam Level Control Actuator LH
H 2 Headlight Beam Level Control Actuator RH
H 3 Headlight Assembly LH
H 4 Headlight Assembly LH
H 5 Headlight Assembly RH
H 6 Headlight Assembly RH
H 7 Headlight LH
H 8 Headlight RH
H 9 Horn (High)
H10 Horn (Low)

Position of Parts in Engine Compartment

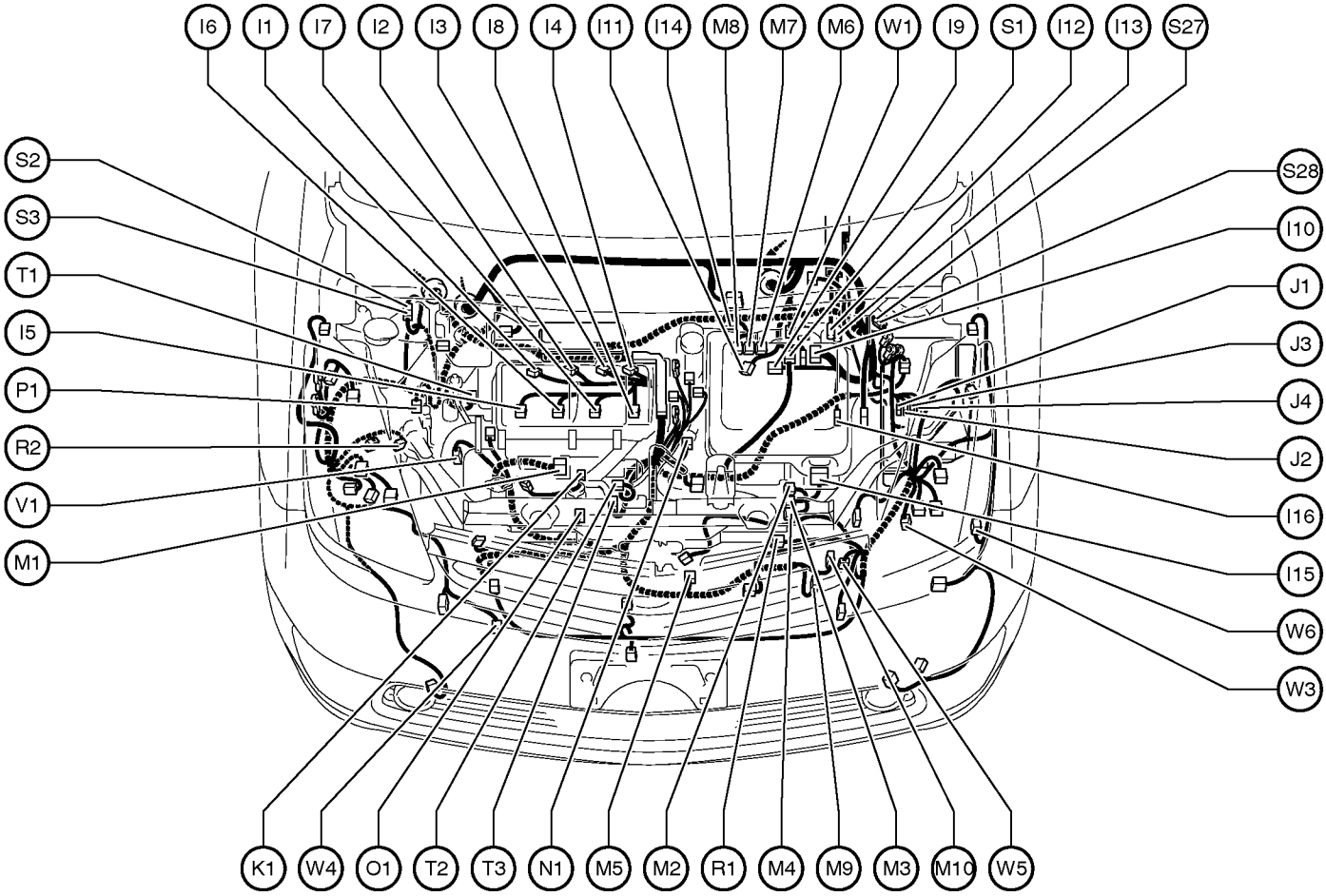

I 1 Ignition Coil and Igniter No.1
I 2 Ignition Coil and Igniter No.2
I 3 Ignition Coil and Igniter No.3
I 4 Ignition Coil and Igniter No.4
I 5 Injector No.1
I 6 Injector No.2
I 7 Injector No.3
I 8 Injector No.4
I 9 Inverter
I 10 Inverter
I 11 Inverter
I 12 Inverter
I 13 Inverter
I 14 Inverter
I 15 Inverter
I 16 Inverter

J 1 Junction Connector
J 2 Junction Connector
J 3 Junction Connector
J 4 Junction Connector

K 1 Knock Sensor (Bank 1)

M 1 Mass Air Flow Meter
M 2 Motor Generator No.1
M 3 Motor Generator No.1
M 4 Motor Generator No.1
M 5 Motor Generator No.1
M 6 Motor Generator No.2
M 7 Motor Generator No.2
M 8 Motor Generator No.2
M 9 Motor Generator No.2
M10 Motor Generator No.2

N 1 Noise Filter (Ignition)

O 1 Oil Pressure SW

P 1 Pressure SW

R 1 Radiator Fan Motor
R 2 Rear Washer Motor

S 1 Shift Control Actuator
S 2 Short Connector
S 3 Short Connector
S27 Short Connector (Water Pump)
S28 Short Connector (Water Pump)

T 1 Theft Deterrent Horn
T 2 Throttle Control Motor
T 3 Throttle Position Sensor

V 1 VSV (EVAP)

W 1 Water Pump Motor (A/C)
W 3 Water Pump Motor (Inverter)
W 4 Water Temp. SW
W 5 Water Valve
W 6 Wireless Door Lock Buzzer

Position of Parts in Instrument Panel

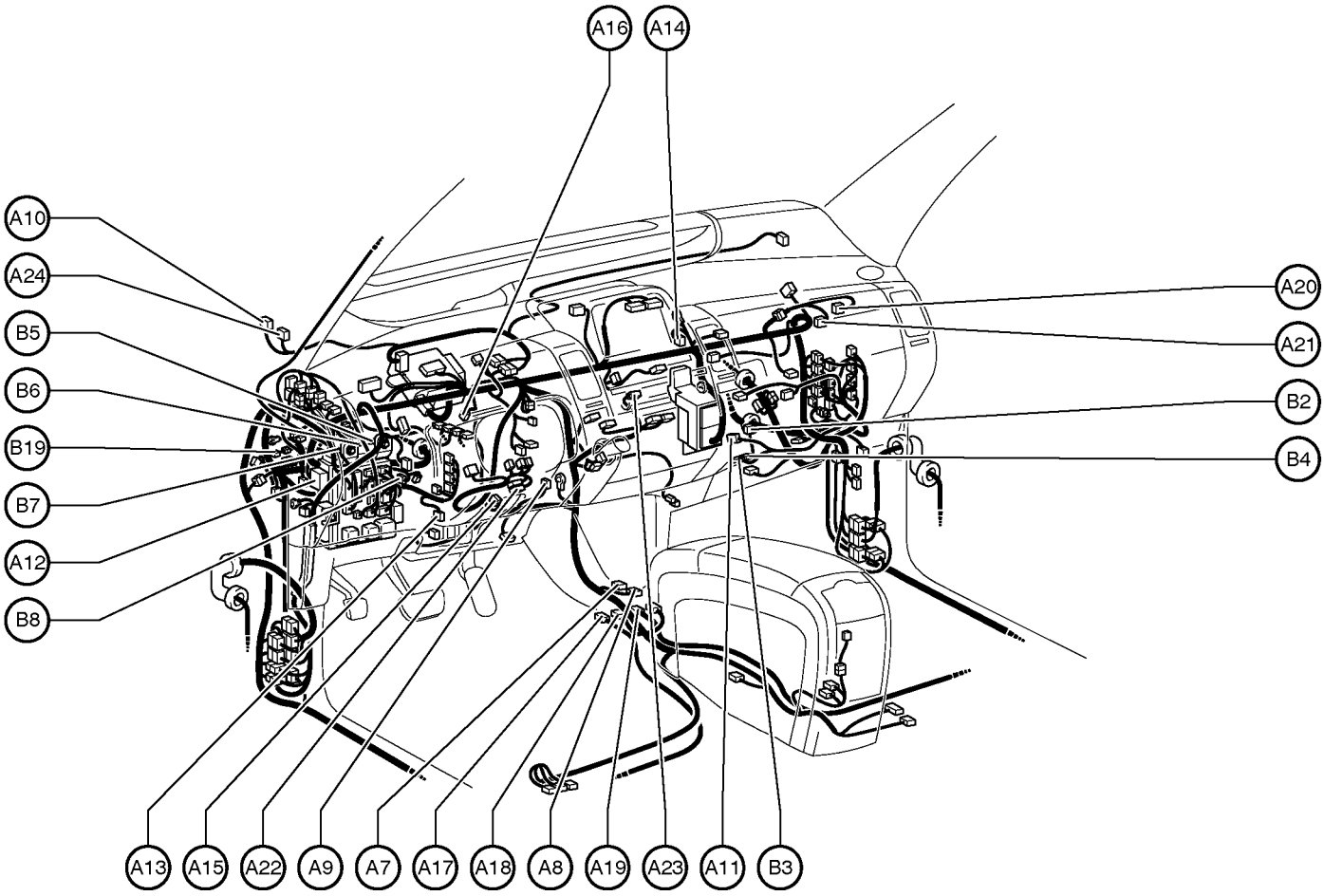

A 7 A/C Control Assembly
A 8 A/C Control Assembly
A 9 A/C Room Temp. Sensor
A10 A/C Solar Sensor
A11 A/C Thermistor
A12 ACC Relay
A13 Accel Position Sensor
A14 Air Inlet Control Servo Motor
A15 Air Mix Control Servo Motor
A16 Air Vent Mode Control Servo Motor
A17 Airbag Sensor Assembly
A18 Airbag Sensor Assembly
A19 Airbag Sensor Assembly
A20 Airbag Squib (Front Passenger Airbag Assembly No.1)
A21 Airbag Squib (Front Passenger Airbag Assembly No.2)
A22 Airbag Squib (Steering Wheel Pad)
A23 Antenna Amplifier
A24 Automatic Light Control Sensor

B 2 Blower Motor
B 3 Blower Motor Controller
B 4 Blower Motor Controller
B 5 Body ECU
B 6 Body ECU
B 7 Body ECU
B 8 Brake Pedal Stroke Sensor
B19 Brake Actuator Resistor

Position of Parts in Instrument Panel

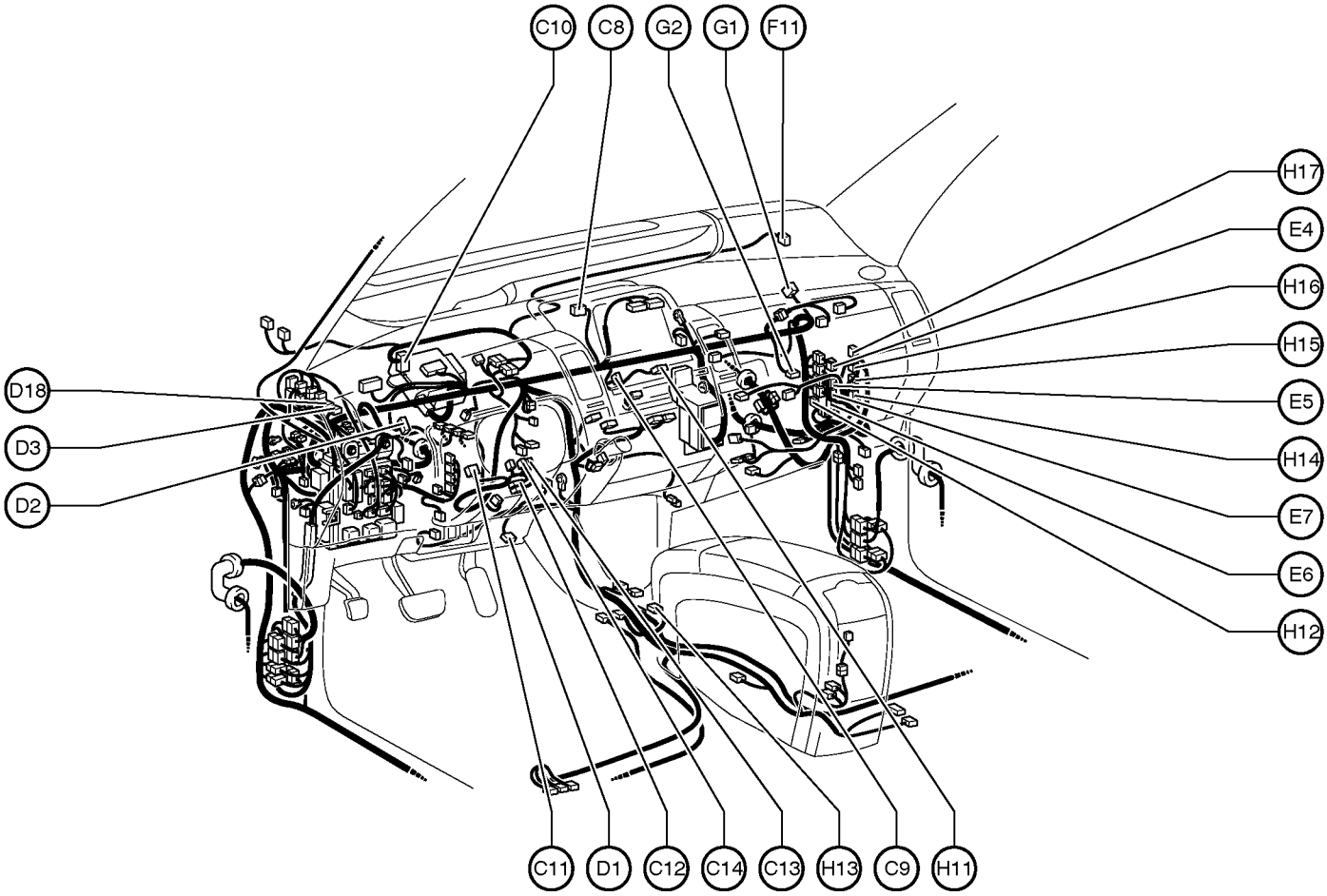

C 8 Center Speaker
C 9 Clock
C10 Combination Meter
C11 Combination SW
C12 Combination SW
C13 Combination SW
C14 Combination SW

D 1 Data Link Connector 3
D 2 Daytime Running Light Relay
D 3 Diode (Daytime Running Light)
D18 Diode (Rear Wiper)

E 4 Engine Control Module
E 5 Engine Control Module
E 6 Engine Control Module
E 7 Engine Control Module

F 11 Front Passenger Seat Belt Warning Light

G 1 Gateway ECU
G 2 Glove Box Light

H11 Hazard SW
ODO/TRIP SW
H12 Headlight Beam Level Control ECU
H13 Heated Oxygen Sensor (Bank 1 Sensor 2)
H14 Hybrid Vehicle Control ECU
H15 Hybrid Vehicle Control ECU
H16 Hybrid Vehicle Control ECU
H17 Hybrid Vehicle Control ECU

Position of Parts in Instrument Panel

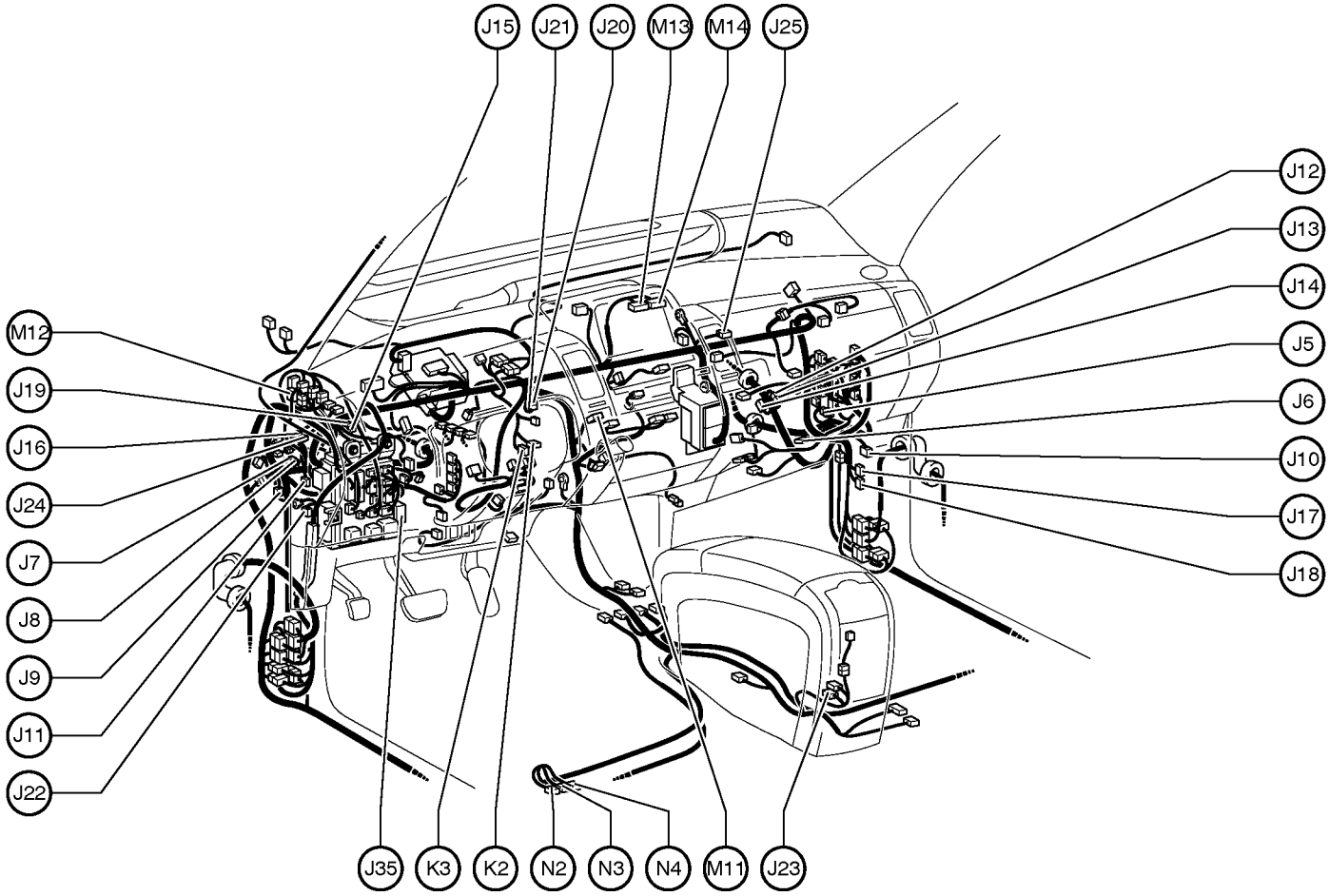

J 5 Junction Connector
J 6 Junction Connector
J 7 Junction Connector
J 8 Junction Connector
J 9 Junction Connector
J 10 Junction Connector
J 11 Junction Connector
J 12 Junction Connector
J 13 Junction Connector
J 14 Junction Connector
J 15 Junction Connector
J 16 Junction Connector
J 17 Junction Connector
J 18 Junction Connector
J 19 Junction Connector
J 20 Junction Connector
J 21 Junction Connector
J 22 Junction Connector
J 23 Junction Connector
J 24 Junction Connector
J 25 Junction Connector
J 35 Junction Connector

K 2 Key Slot
K 3 Key Slot

M11 Main SW
M12 Mirror Heater Relay
M13 Multi-Display
M14 Multi-Display

N 2 Navigation ECU
N 3 Navigation ECU
N 4 Navigation ECU

Position of Parts in Instrument Panel

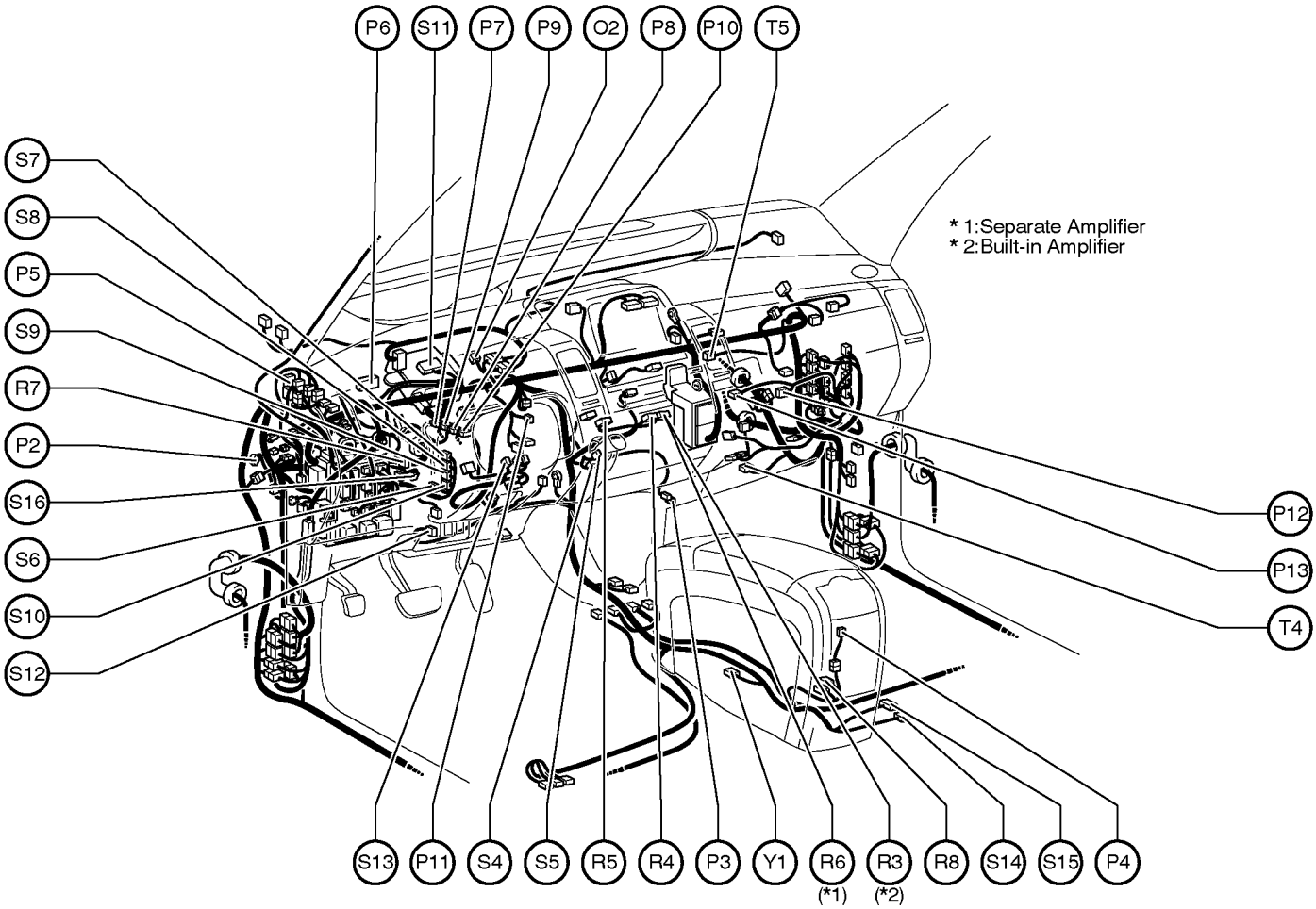

O 2 Option Connector (Glass Breakage Sensor)

P 2 Parking Brake SW
P 3 Power Outlet No.1
P 4 Power Outlet No.2
P 5 Power Outlet Relay
P 6 Power Source Control ECU
P 7 Power Steering ECU
P 8 Power Steering ECU
P 9 Power Steering Motor
P 10 Power Steering Torque Sensor
P 11 Power SW
P 12 PTC Heater
P 13 PTC Heater

R 3 Radio and Player
R 4 Radio and Player
R 5 Radio and Player
R 6 Radio and Player
R 7 Rheostat
R 8 Room Oscillator

S 4 Shift Lever Position Sensor
S 5 Shift Lever Position Sensor
S 6 Skid Control Buzzer
S 7 Skid Control ECU
S 8 Skid Control ECU
S 9 Skid Control ECU
S 10 Skid Control ECU
S 11 Smart Key ECU
S 12 Smart Key System Cancel SW
S 13 Steering Sensor
S 14 Stereo Component Amplifier
S 15 Stereo Component Amplifier
S 16 Stop Light SW

T 4 Transmission Control ECU
T 5 Transponder Key Computer

Y 1 Yaw Rate Sensor

Position of Parts in Body

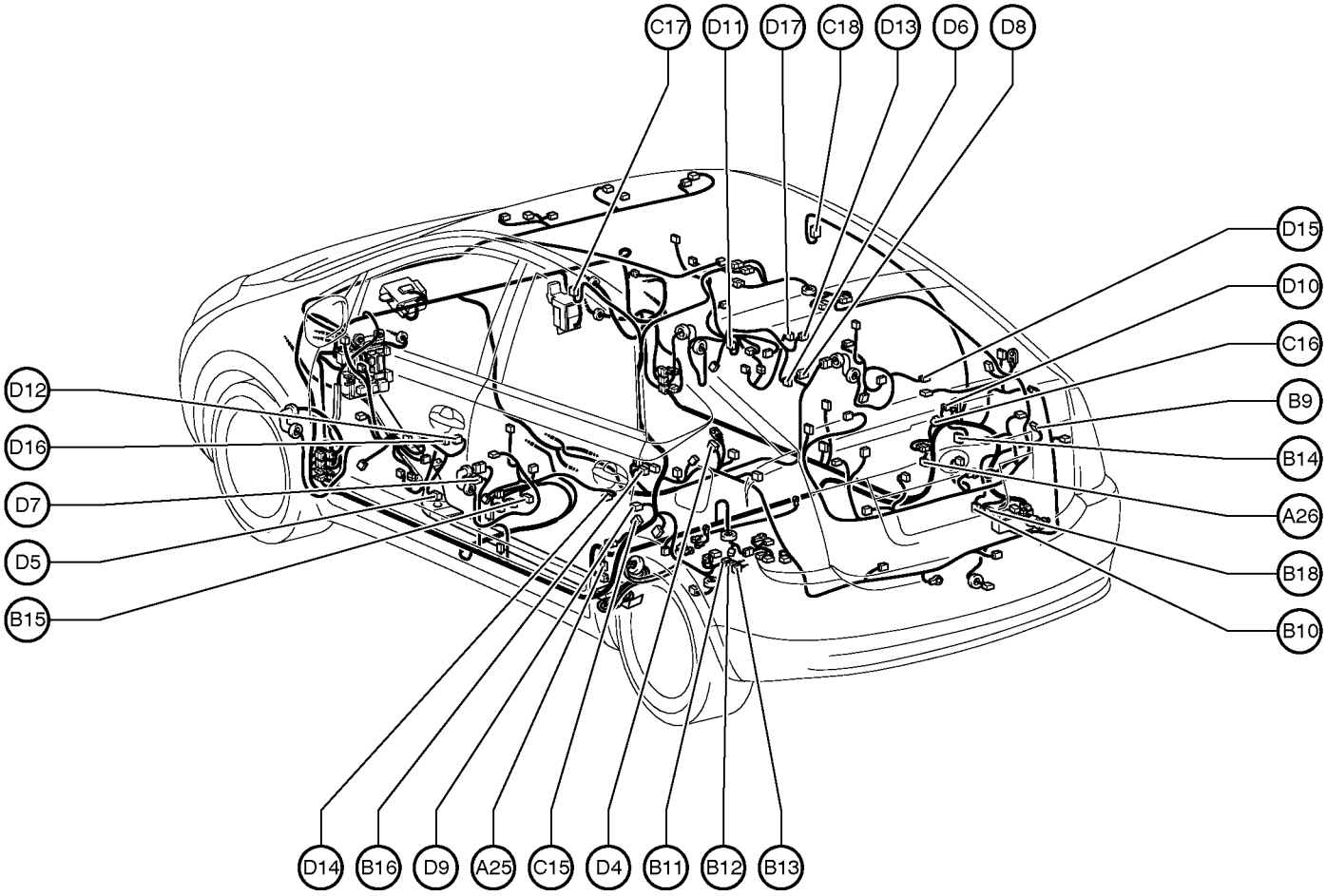

A25 ABS Speed Sensor Rear LH
A26 ABS Speed Sensor Rear RH

B 9 Battery Blower Motor
B10 Battery Blower Motor Controller
B11 Battery ECU
B12 Battery ECU
B13 Battery ECU
B14 Battery Fan Relay
B15 Buckle SW Front LH
B16 Buckle SW Front RH
B18 Brake Control Power Supply

C15 Curtain Shield Airbag Sensor LH
C16 Curtain Shield Airbag Sensor RH
C17 Curtain Shield Airbag Squib LH
C18 Curtain Shield Airbag Squib RH

D 4 Door Control Receiver
D 5 Door Courtesy Light Front LH
D 6 Door Courtesy Light Front RH
D 7 Door Courtesy SW Front LH
D 8 Door Courtesy SW Front RH
D 9 Door Courtesy SW Rear LH
D10 Door Courtesy SW Rear RH
D11 Door Lock Control SW Front RH
D12 Door Lock Motor Front LH
Door Unlock Detection SW Front LH
D13 Door Lock Motor Front RH
Door Unlock Detection SW Front RH
D14 Door Lock Motor Rear LH
Door Unlock Detection SW Rear LH
D15 Door Lock Motor Rear RH
Door Unlock Detection SW Rear RH
D16 Door Oscillator Front LH (w/ Sensor)
D17 Door Oscillator Front RH (w/ Sensor)

Position of Parts in Body

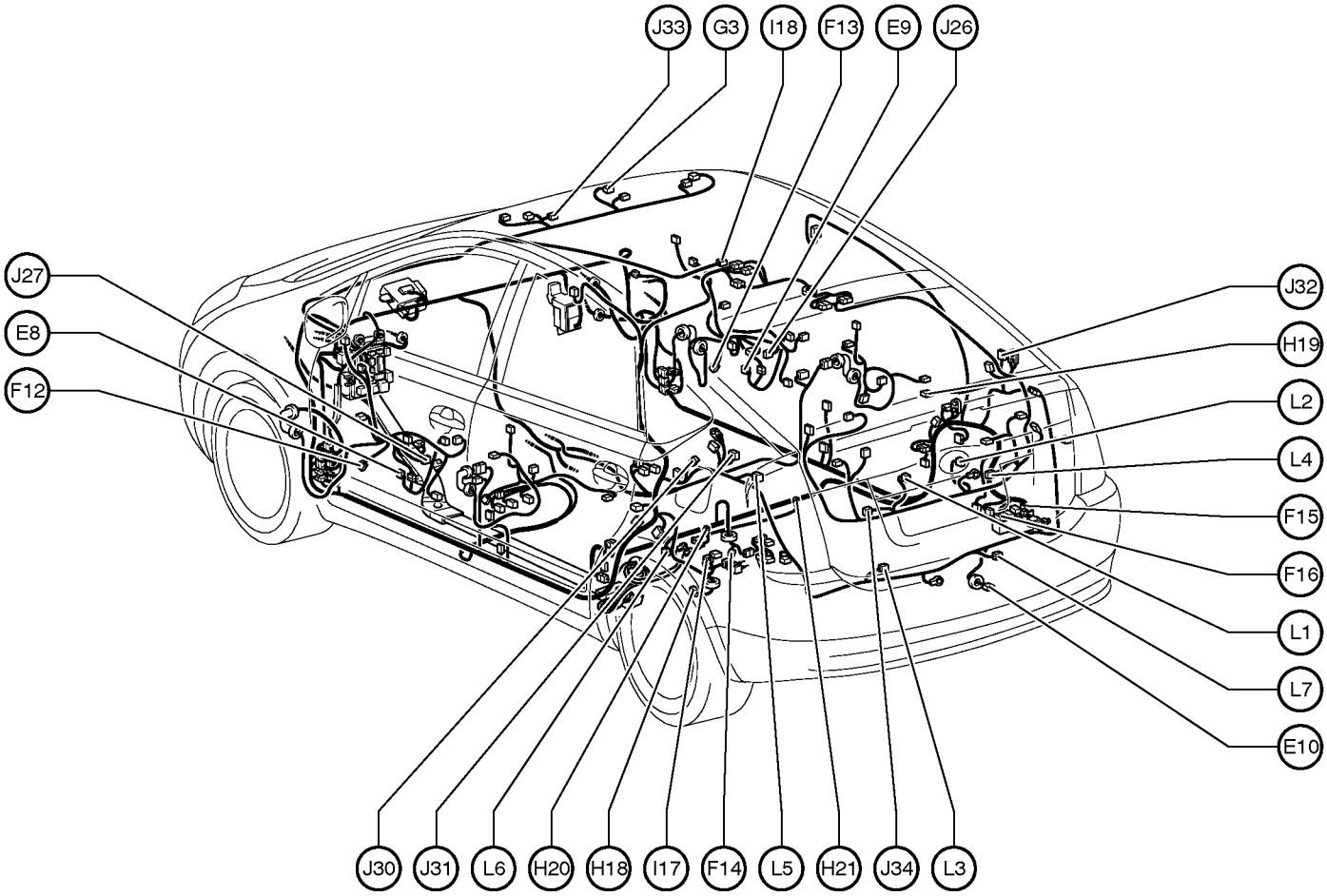

E 8 Electrical Key Antenna (Driver's Side)
E 9 Electrical Key Antenna (Front Passenger's Side)
E10 Electrical Key Antenna (Luggage Compartment Door)

F12 Front Door Speaker LH
F13 Front Door Speaker RH
F14 Fuel Pump
Fuel Sender
F15 Fusible Link Block
F16 Fusible Link Block

G 3 Garage Door Opener
Inner Mirror

H18 Height Control Sensor
H19 High Mounted Stop Light
H20 Hybrid Vehicle Battery
H21 Hybrid Vehicle Battery

I 17 Inter Lock SW
I 18 Interior Light

J 26 Junction Connector
J 27 Junction Connector
J 30 Junction Connector
J 31 Junction Connector
J 32 Junction Connector
J 33 Junction Connector
J 34 Junction Connector

L 1 License Plate Light LH
L 2 License Plate Light RH
L 3 Luggage Compartment Courtesy SW
Luggage Compartment Door Opener Motor
L 4 Luggage Compartment Door Lock SW
Luggage Compartment Door Opener SW
L 5 Luggage Compartment Light
L 6 Luggage Oscillator (Inner)
L 7 Luggage Oscillator (Outer)

Position of Parts in Body

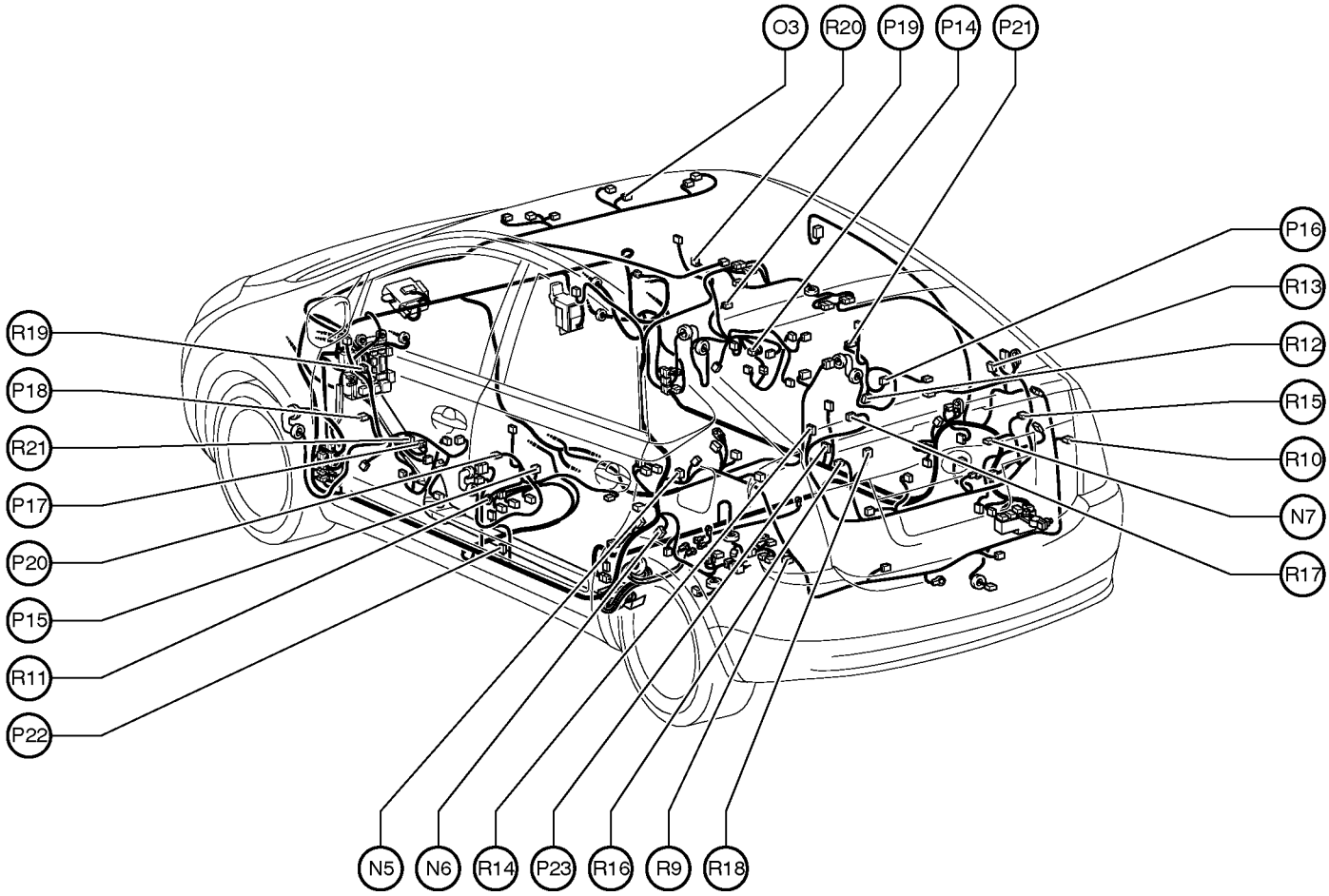

N 5 Noise Filter (High Mounted Stop Light)
N 6 Noise Filter (Rear Window Defogger)
N 7 Noise Filter (Rear Window Defogger)

O 3 Overhead J/B

P 14 Power Window Control SW Front RH
P 15 Power Window Control SW Rear LH
P 16 Power Window Control SW Rear RH
P 17 Power Window Master SW
P 18 Power Window Motor Front LH
P 19 Power Window Motor Front RH
P 20 Power Window Motor Rear LH
P 21 Power Window Motor Rear RH
P 22 Pretensioner LH
P 23 Pretensioner RH

R 9 Rear Combination Light LH
R 10 Rear Combination Light RH
R 11 Rear Door Speaker LH
R 12 Rear Door Speaker RH
R 13 Rear Window Defogger
R 14 Rear Window Defogger
R 15 Rear Window Defogger
R 16 Rear Window Defogger
R 17 Rear Wiper Motor
R 18 Rear Wiper Relay
R 19 Mirror Heater LH
Remote Control Mirror LH
R 20 Mirror Heater RH
Remote Control Mirror RH
R 21 Remote Control Mirror SW

Position of Parts in Body

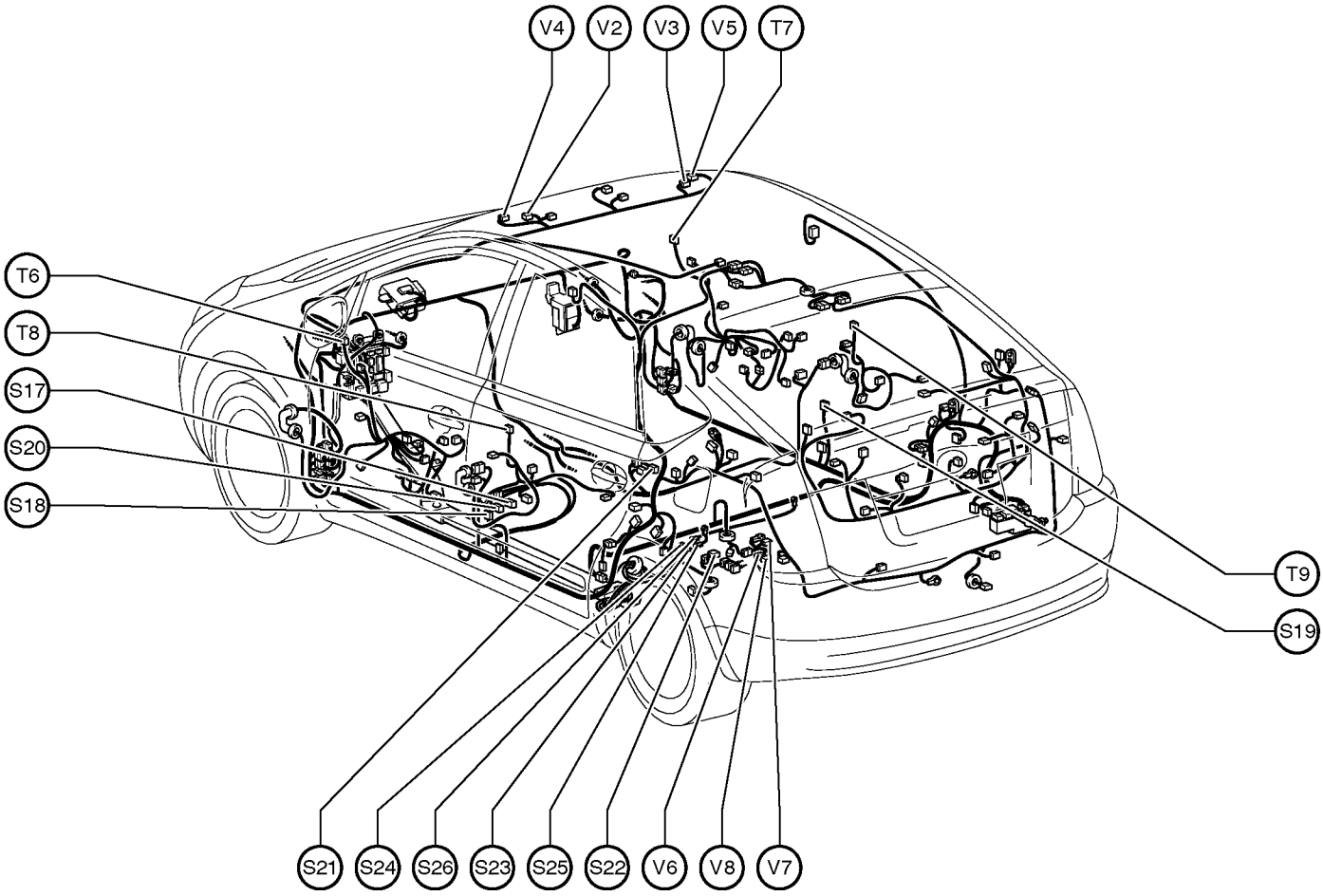

S17 Seat Position Airbag Sensor
S18 Side Airbag Sensor LH
S19 Side Airbag Sensor RH
S20 Side Airbag Squib LH
S21 Side Airbag Squib RH
S22 System Main Relay
S23 System Main Relay
S24 System Main Relay
S25 System Main Relay
S26 System Main Relay

T 6 Tweeter Front LH
T 7 Tweeter Front RH
T 8 Tweeter Rear LH
T 9 Tweeter Rear RH

V 2 Vanity Light LH
V 3 Vanity Light RH
V 4 Vanity Light SW LH
V 5 Vanity Light SW RH
V 6 Vapor Pressure Sensor
V 7 VSV (Canister Closed Valve)
V 8 VSV (Purge Flow Switching Valve)

▭ : Location of Connector Joining Wire Harness and Wire Harness

▽ : Location of Ground Points

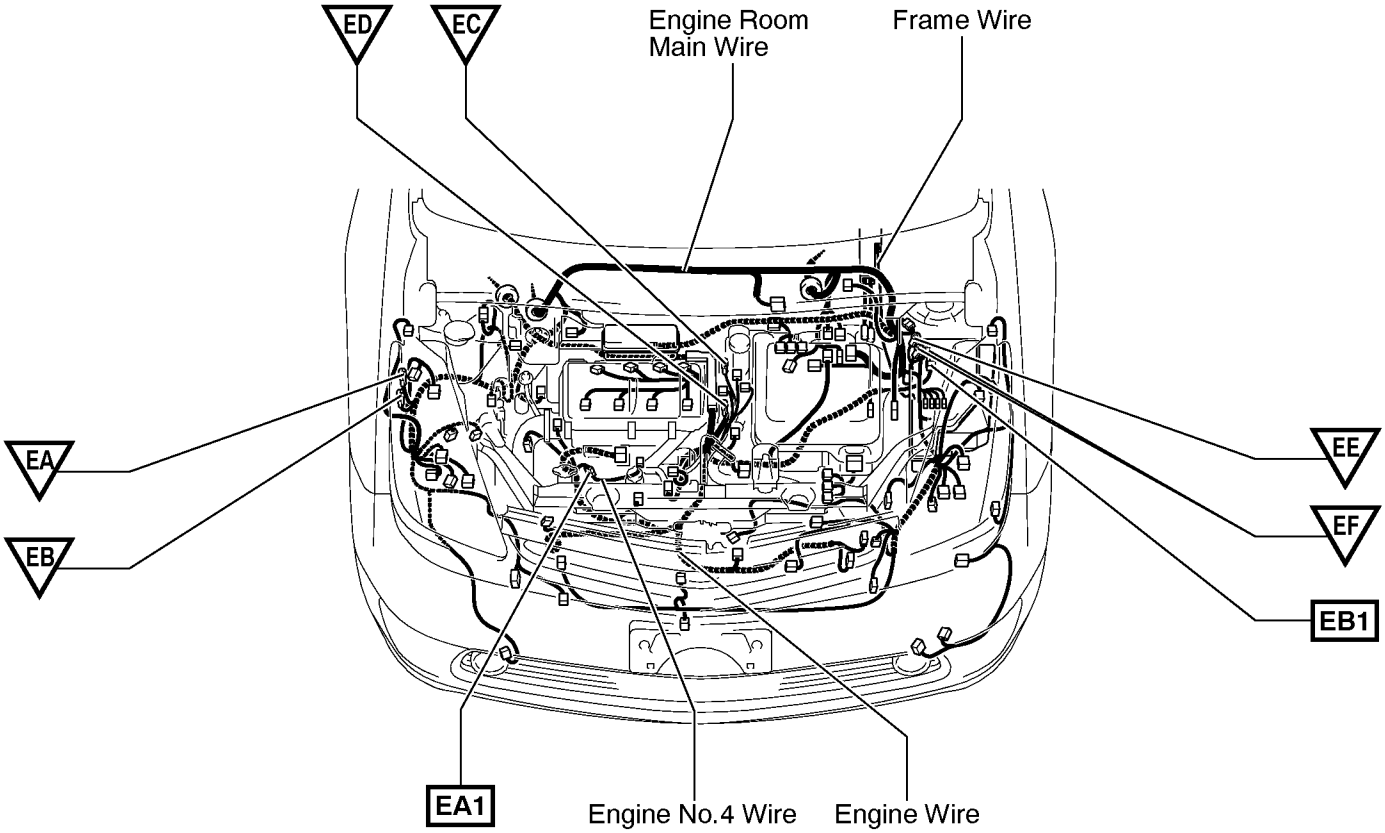

⬡ : Location of Splice Points

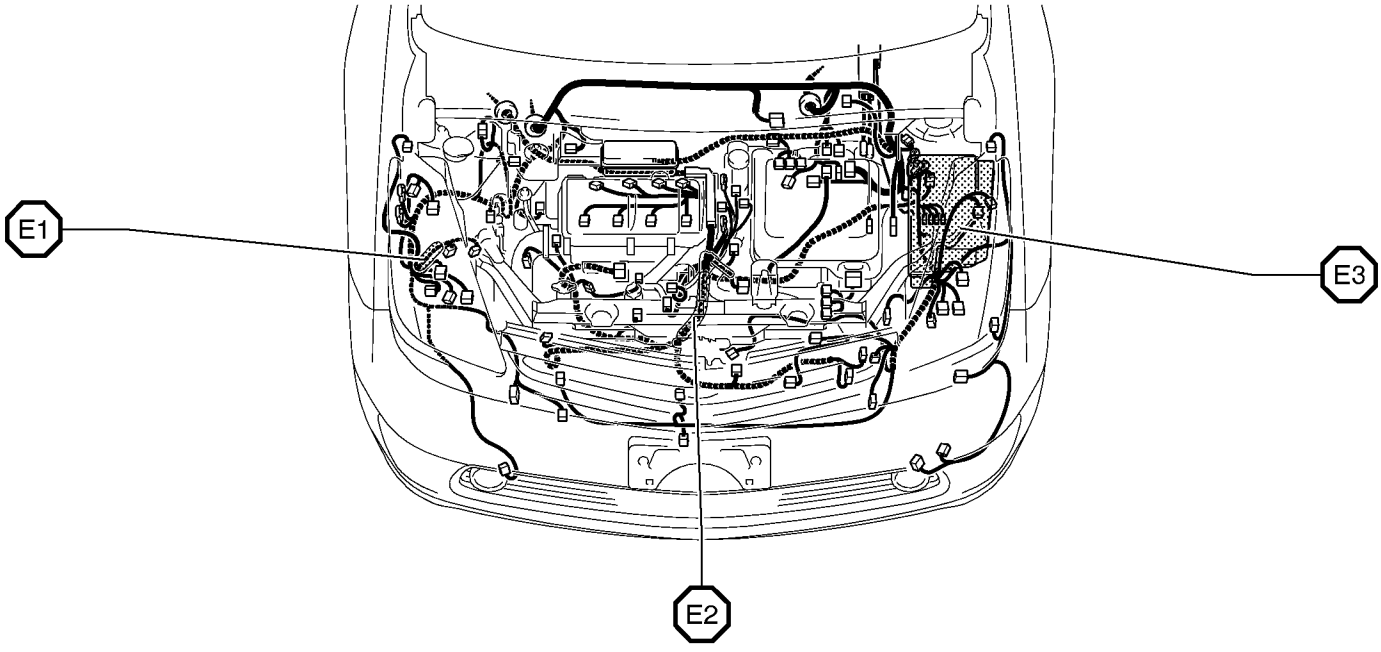

Connector Joining Wire Harness and Wire Harness

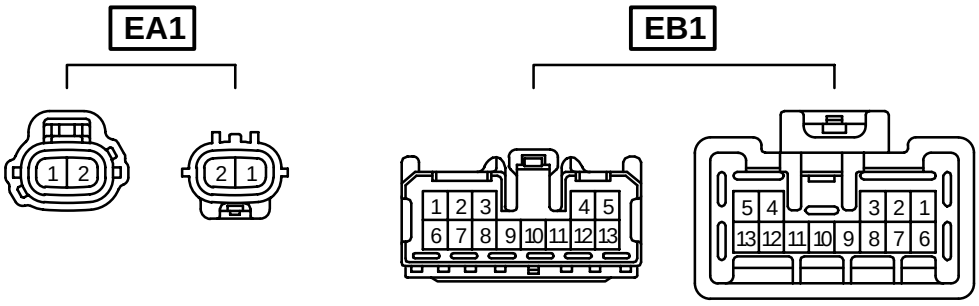

Code	Joining Wire Harness and Wire Harness (Connector Location)
EA1	Engine Wire and Engine No.4 Wire (Near the Radiator Fan)
EB1	Engine Wire and Engine Room Main Wire (Inside of the Engine Room R/B)

▭ : Location of Connector Joining Wire Harness and Wire Harness

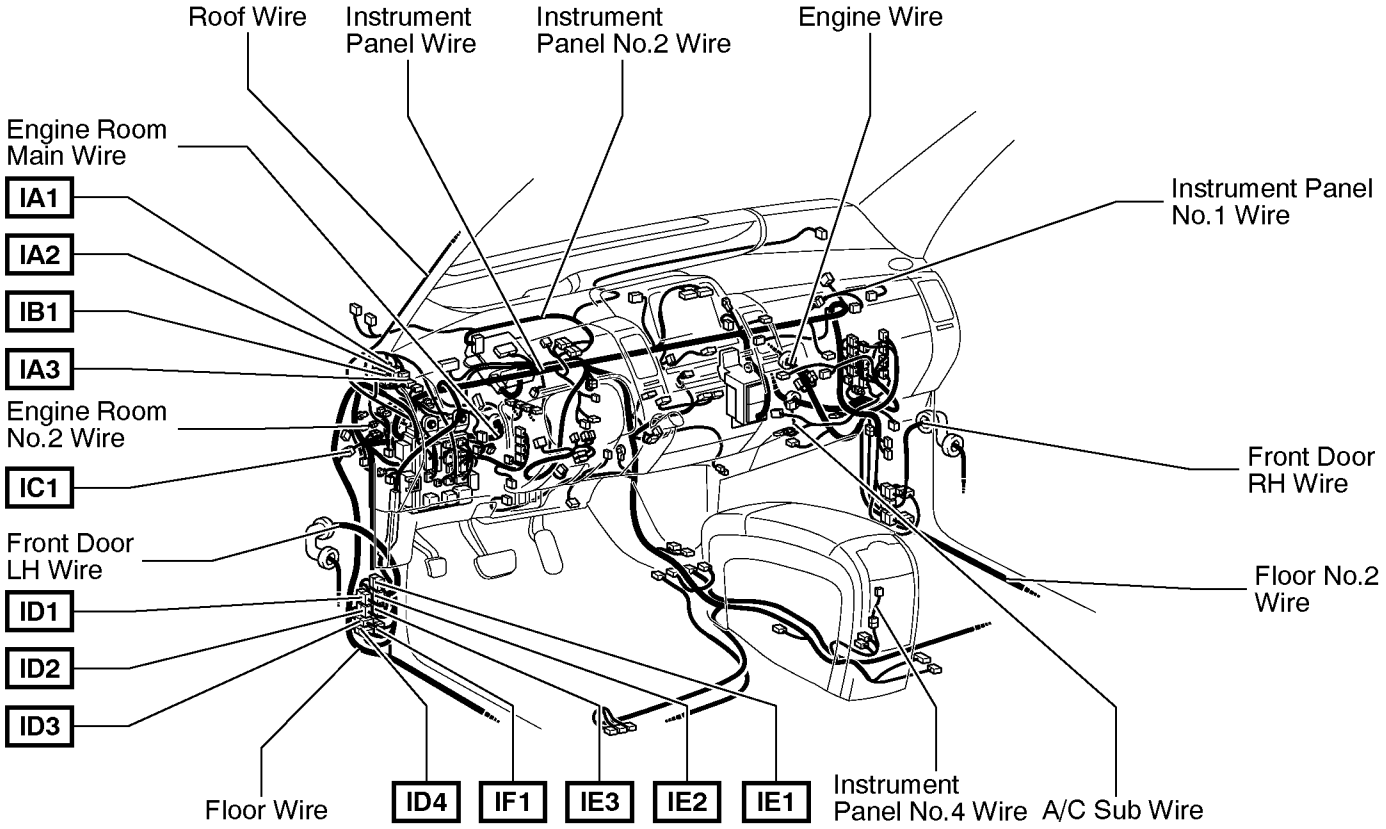

▽ : Location of Ground Points

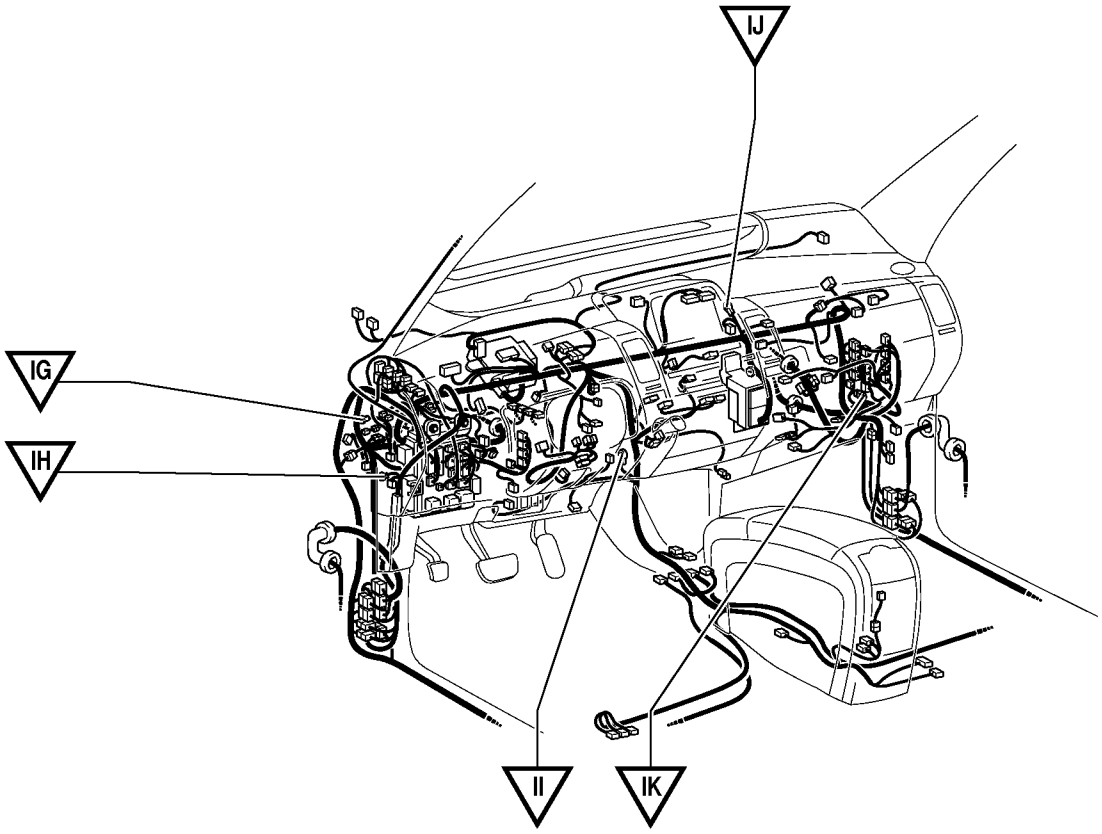

Connector Joining Wire Harness and Wire Harness

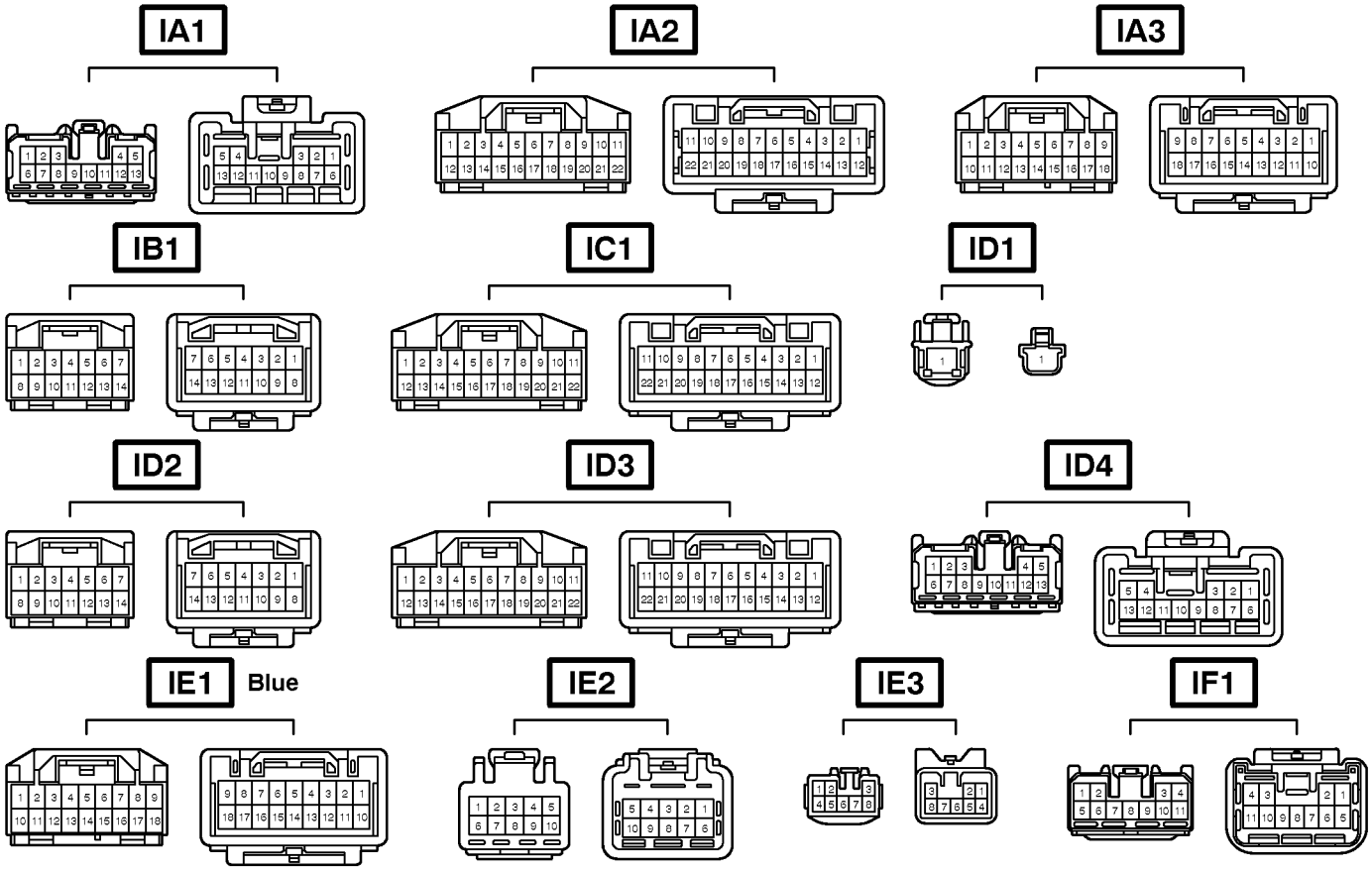

Code	Joining Wire Harness and Wire Harness (Connector Location)
IA1	Engine Room Main Wire and Instrument Panel Wire (Upper Parts of Front Body Pillar LH)
IA2	
IA3	
IB1	Roof Wire and Instrument Panel Wire (Upper Parts of Front Body Pillar LH)
IC1	Engine Room Main Wire and Floor Wire (Cowl Side Panel LH)
ID1	Instrument Panel Wire and Floor Wire (Left Kick Panel)
ID2	
ID3	
ID4	
IE1	Front Door LH Wire and Instrument Panel Wire (Left Kick Panel)
IE2	
IE3	
IF1	Floor Wire and Engine Room Main Wire (Left Kick Panel)

▭ : Location of Connector Joining Wire Harness and Wire Harness

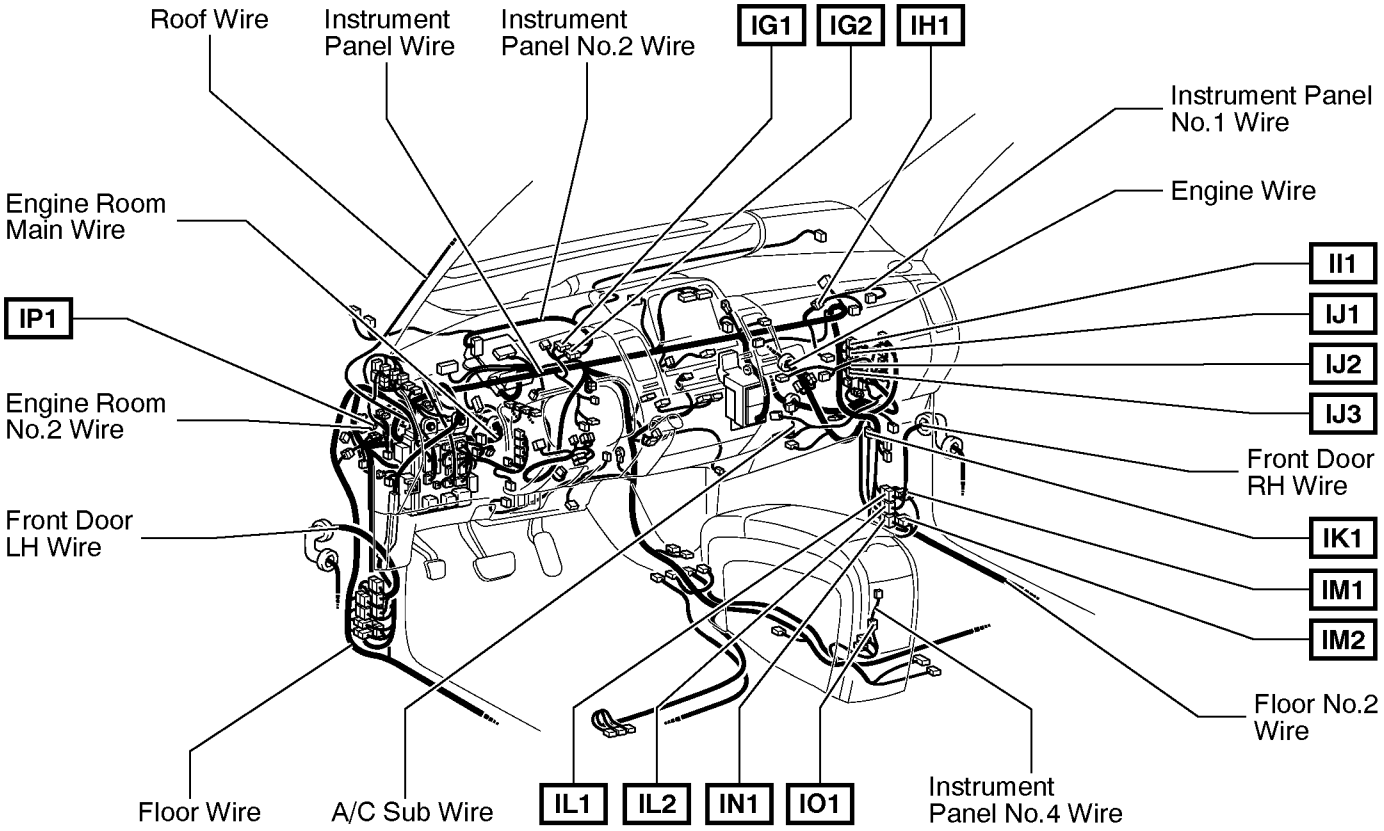

⬡ : Location of Splice Points

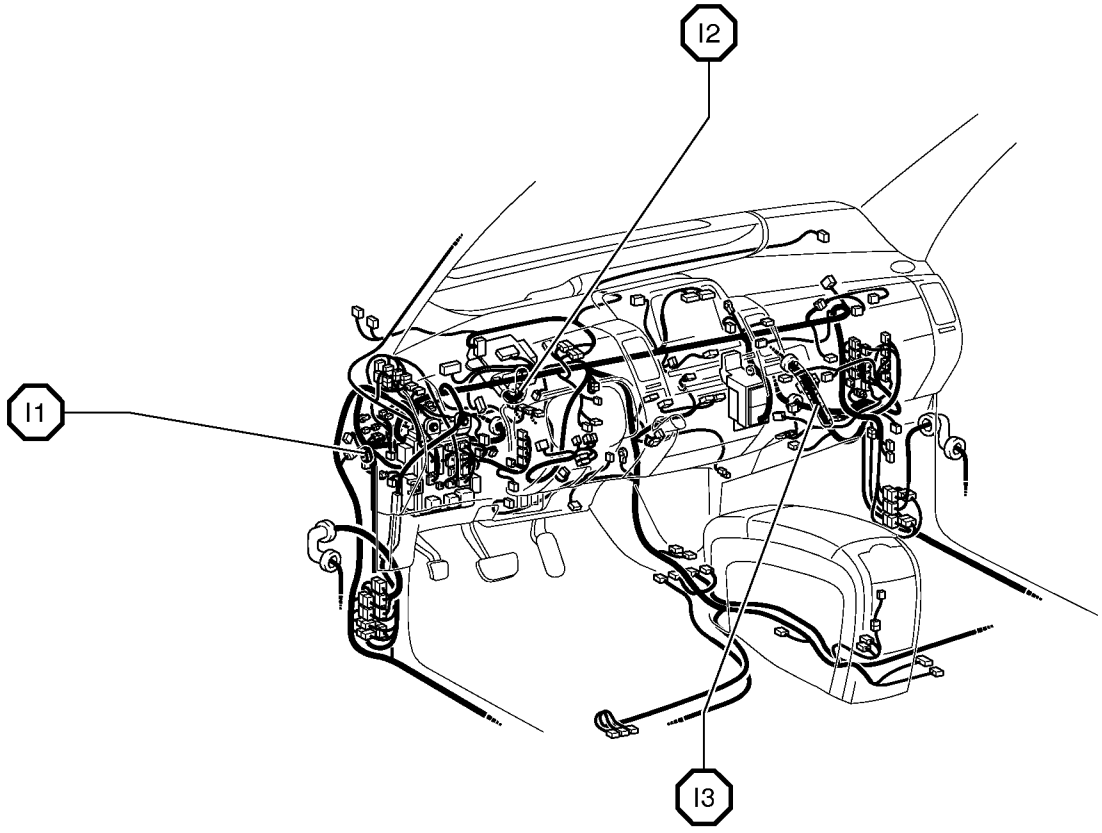

Connector Joining Wire Harness and Wire Harness

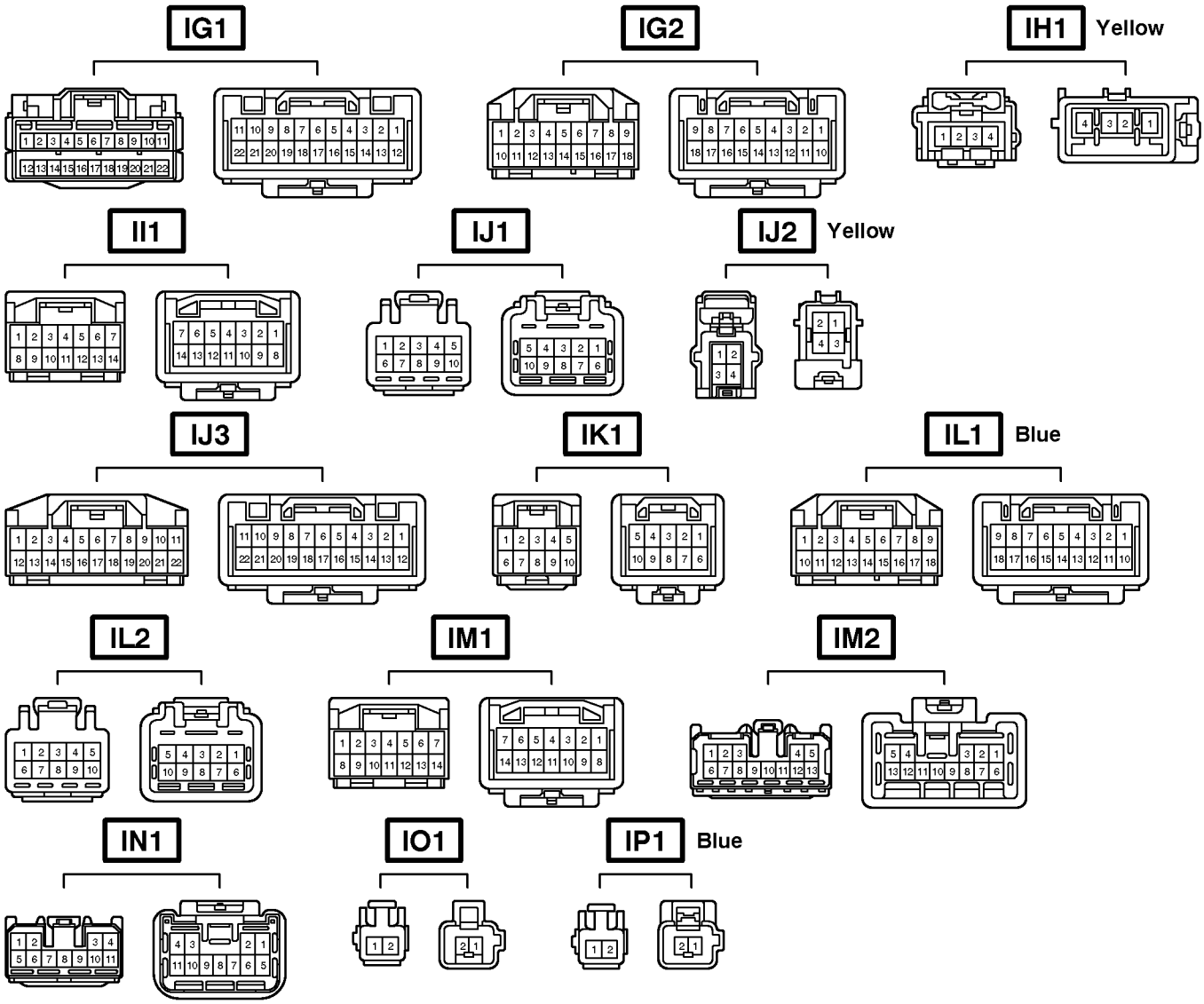

Code	Joining Wire Harness and Wire Harness (Connector Location)
IG1	Instrument Panel Wire and Instrument Panel No.2 Wire (Behind the Combination Meter)
IG2	
IH1	Instrument Panel Wire and Instrument Panel No.1 Wire (Behind the Glove Box)
II1	Engine Wire and Instrument Panel Wire (Behind the Glove Box)
IJ1	Engine Room Main Wire and Instrument Panel Wire (Behind the Glove Box)
IJ2	
IJ3	
IK1	Engine Room Main Wire and Floor No.2 Wire (Cowl Side Panel RH)
IL1	Front Door RH Wire and Instrument Panel Wire (Right Kick Panel)
IL2	
IM1	Instrument Panel Wire and Floor No.2 Wire (Right Kick Panel)
IM2	
IN1	Floor No.2 Wire and Engine Room Main Wire (Right Kick Panel)
IO1	Instrument Panel Wire and Instrument Panel No.4 Wire (Front Console Box LH)
IP1	Engine Room No.2 Wire and Engine Room Main Wire (Upper Parts of Front Body Pillar LH)

▭ : Location of Connector Joining Wire Harness and Wire Harness

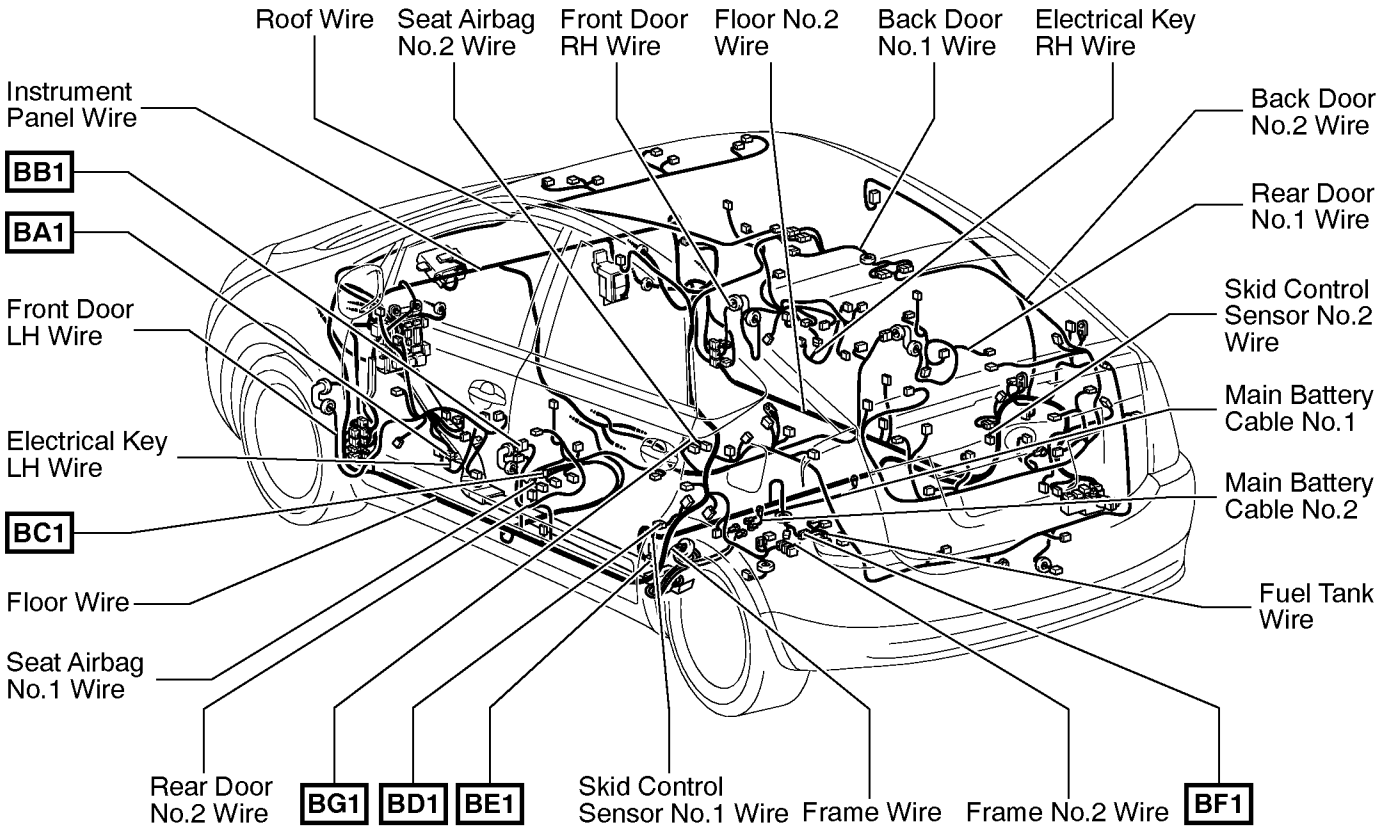

▽ : Location of Ground Points

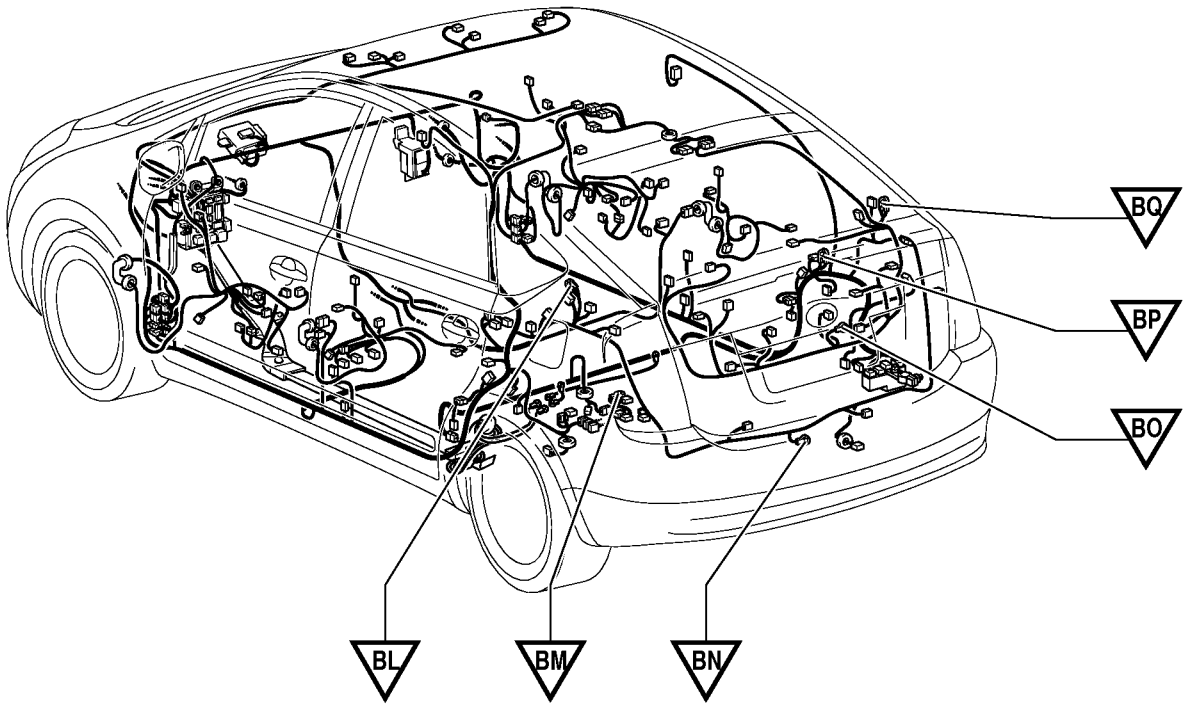

Connector Joining Wire Harness and Wire Harness

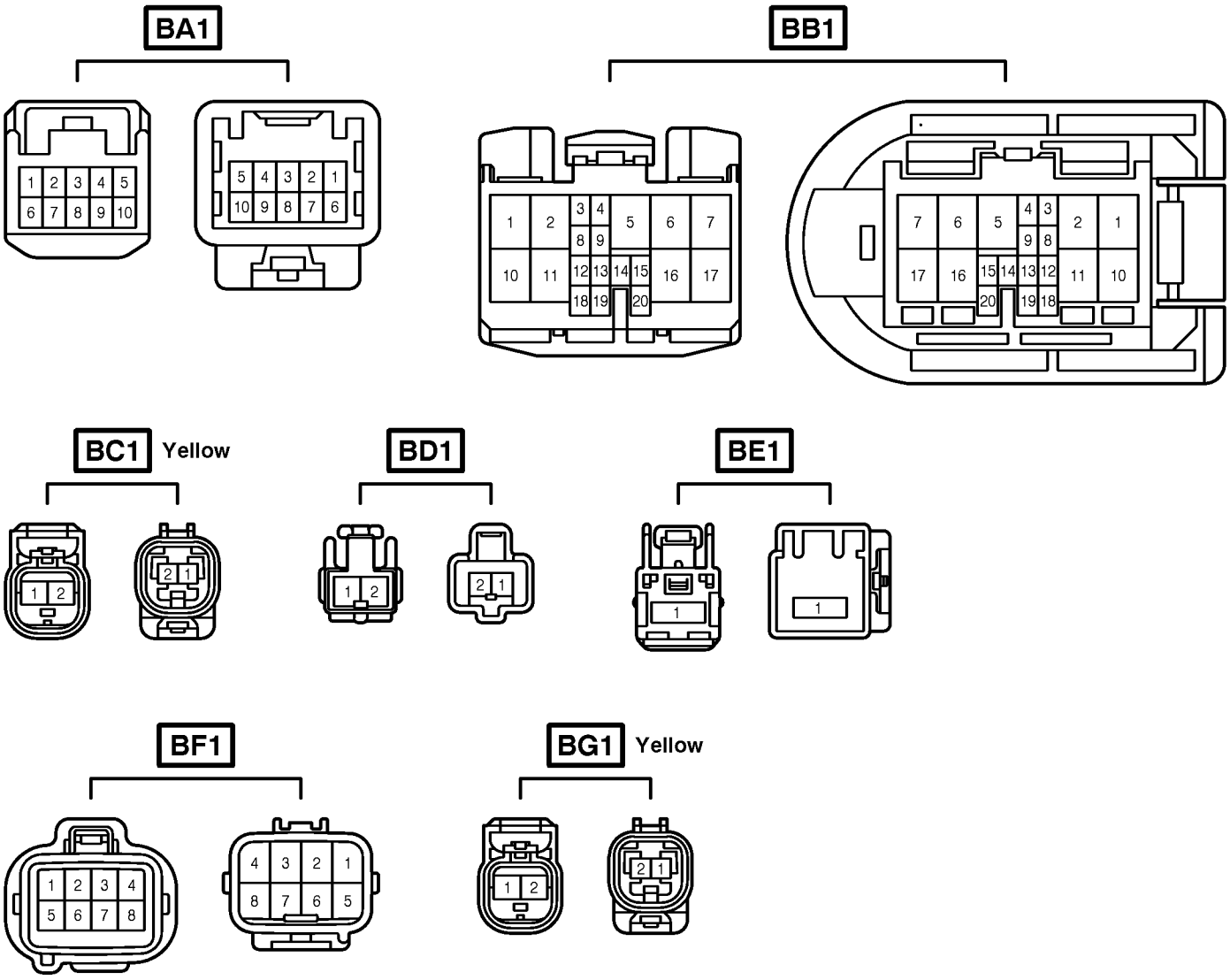

Code	Joining Wire Harness and Wire Harness (Connector Location)
BA1	Front Door LH Wire and Electrical Key LH Wire (Near the Front Door Outside Handle LH)
BB1	Rear Door No.2 Wire and Floor Wire (Left Center Pillar)
BC1	Floor Wire and Seat Airbag No.1 Wire (Under the Driver's Seat)
BD1	Skid Control Sensor No.1 Wire and Floor Wire (Front Side of Left Quarter Panel)
BE1	Frame Wire and Floor No.2 Wire (Front Side of Left Quarter Panel)
BF1	Floor No.2 Wire and Fuel Tank Wire (Near the Fuel Tank)
BG1	Floor No.2 Wire and Seat Airbag No.2 Wire (Under the Front Passenger's Seat)

▭ : Location of Connector Joining Wire Harness and Wire Harness

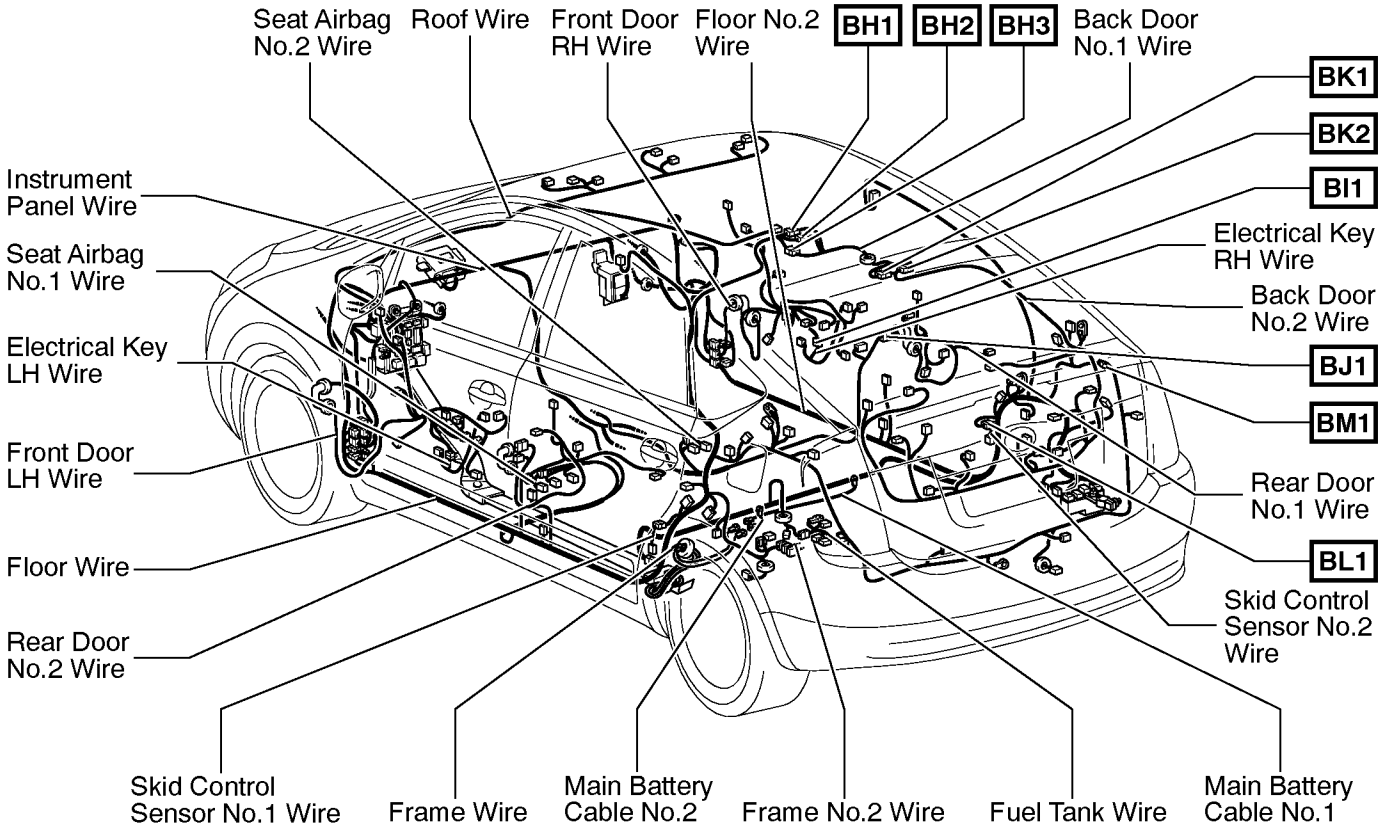

⬡ : Location of Splice Points

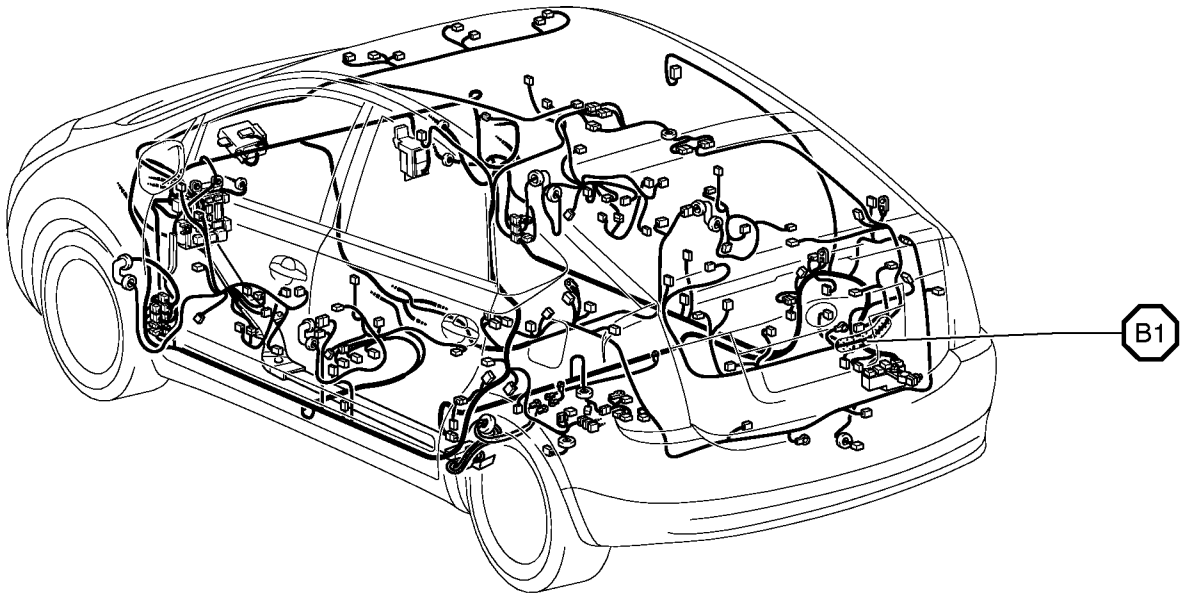

Connector Joining Wire Harness and Wire Harness

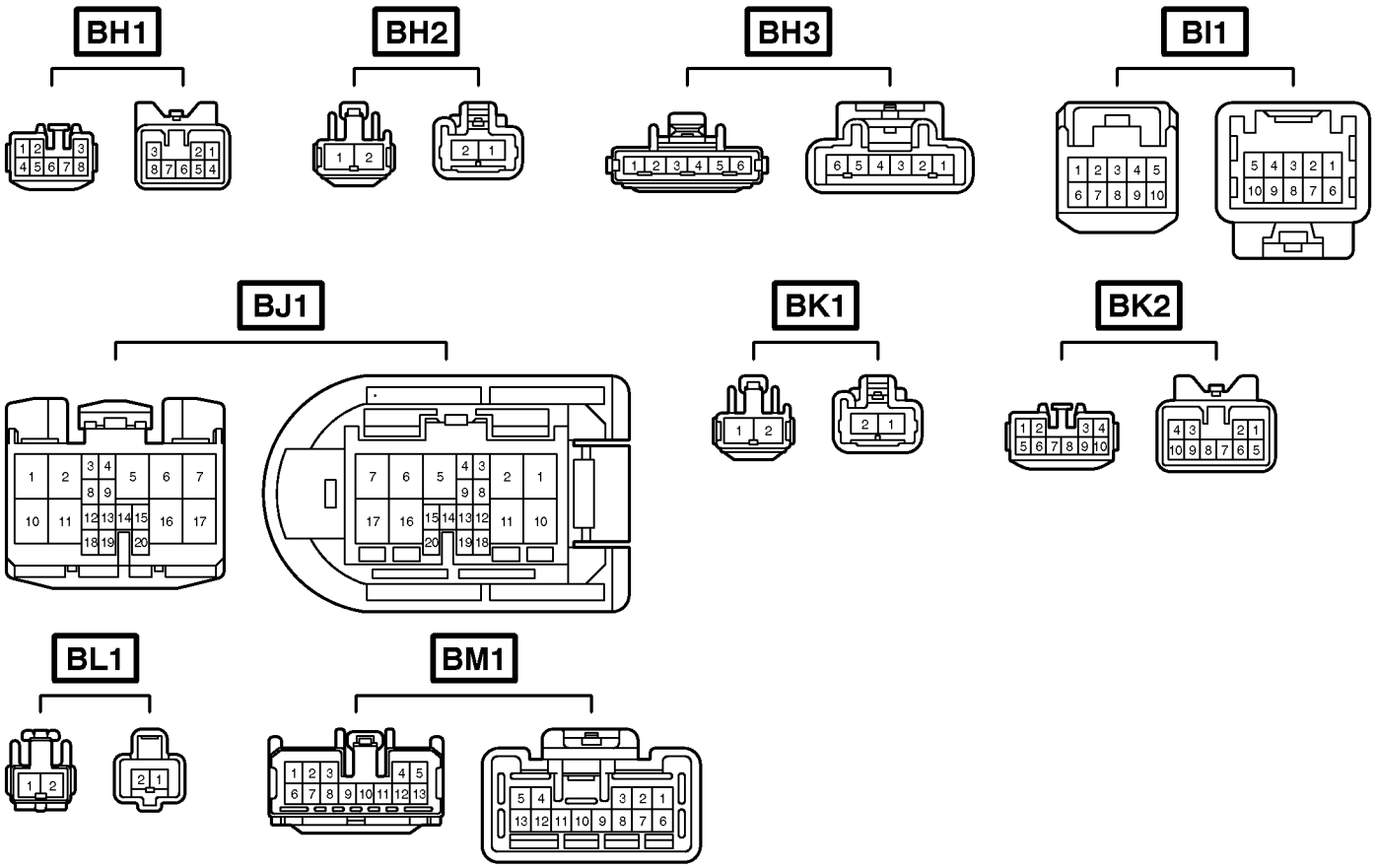

Code	Joining Wire Harness and Wire Harness (Connector Location)
BH1	Back Door No.1 Wire and Floor Wire (Rear Side of Roof Panel)
BH2	
BH3	
BI1	Front Door RH Wire and Electrical Key RH Wire (Near the Front Door Outside Handle RH)
BJ1	Rear Door No.1 Wire and Floor No.2 Wire (Right Center Pillar)
BK1	Back Door No.1 Wire and Back Door No.2 Wire (Rear Side of Roof Panel)
BK2	
BL1	Skid Control Sensor No.2 Wire and Floor No.2 Wire (Front Side of Right Quarter Panel)
BM1	Floor No.2 Wire and Floor Wire (Rear Side of Right Quarter Panel)

Memo

ABBREVIATIONS

The following abbreviations are used in this manual.

A/C	=	Air Conditioning
ABS	=	Anti-Lock Brake System
BA	=	Brake Assist
BEAN	=	Body Electronics Area Network
CAN	=	Controller Area Network
CHS	=	Coolant Heat Storage System
DC	=	Direct Current
EC	=	Electrochromic
ECU	=	Electronic Control Unit
EPS	=	Electric Motor Power Steering
ESA	=	Electronic Spark Advance
EVAP	=	Evaporative Emission
HID	=	High Intensity Discharge
HV	=	Hybrid Vehicle
IC	=	Integrated Circuit
J/B	=	Junction Block
LH	=	Left-Hand
PTC	=	Positive Temperature Coefficient
R/B	=	Relay Block
RH	=	Right-Hand
SFI	=	Sequential Multiport Fuel Injection
SOC	=	State of Charge
SRS	=	Supplemental Restraint System
SW	=	Switch
TEMP.	=	Temperature
TRAC	=	Traction Control
VSC	=	Vehicle Stability Control
VSV	=	Vacuum Switching Valve
VVT-i	=	Variable Valve Timing-intelligent
w/	=	With
w/o	=	Without

* The titles given inside the components are the names of the terminals (terminal codes) and are not treated as being abbreviations.

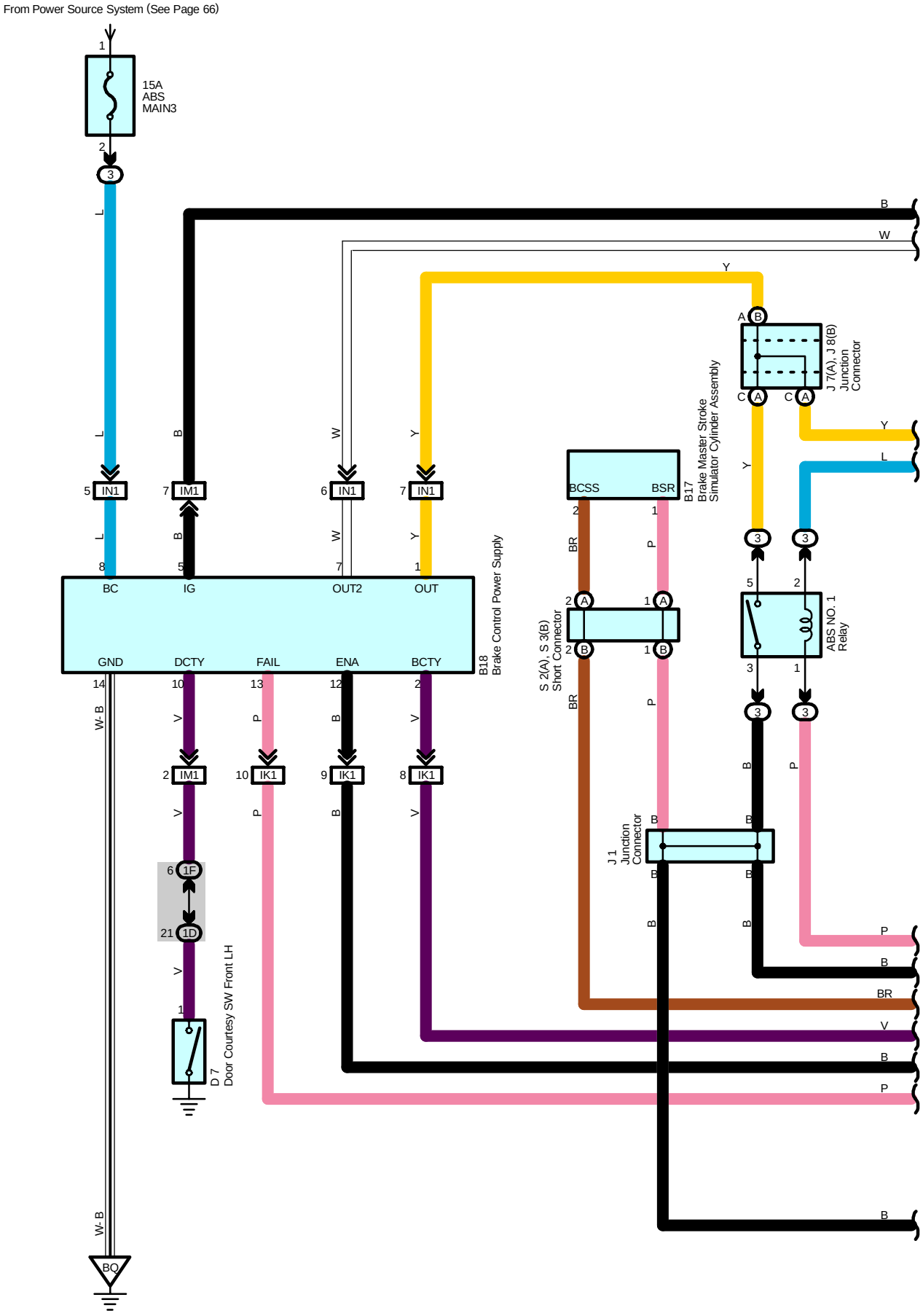
From Power Source System (See Page 66)
15A
ABS
MAIN3
BC
IG
OUT2
OUT
GND
DCTY
FAIL
ENA
BCTY
B18
Brake Control Power Supply
IN1
IM1
IK1
BCSS
BSR
B17
Brake Master Stroke
Simulator Cylinder Assembly
J 7(A), J 8(B)
Junction
Connector
S 2(A), S 3(B)
Short Connector
ABS NO. 1
Relay
J 1
Junction
Connector
D 7
Door Courtesy SW Front LH
W-B
BQ

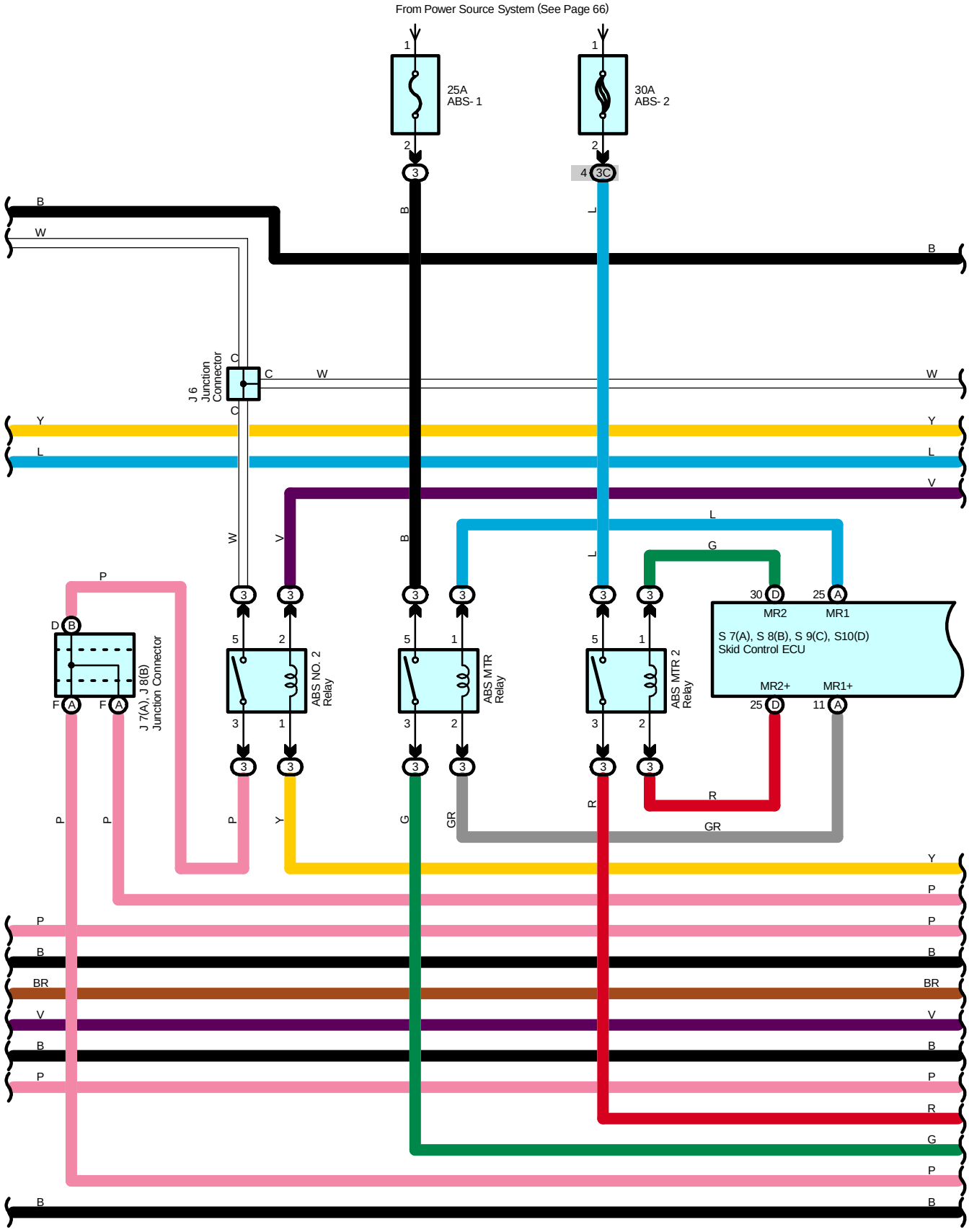
From Power Source System (See Page 66)
25A
ABS- 1
30A
ABS- 2
J 6
Junction
Connector
J 7(A), J 8(B)
Junction Connector
ABS NO. 2
Relay
ABS MTR
Relay
ABS MTR 2
Relay
MR2
MR1
S 7(A), S 8(B), S 9(C), S10(D)
Skid Control ECU
MR2+
MR1+

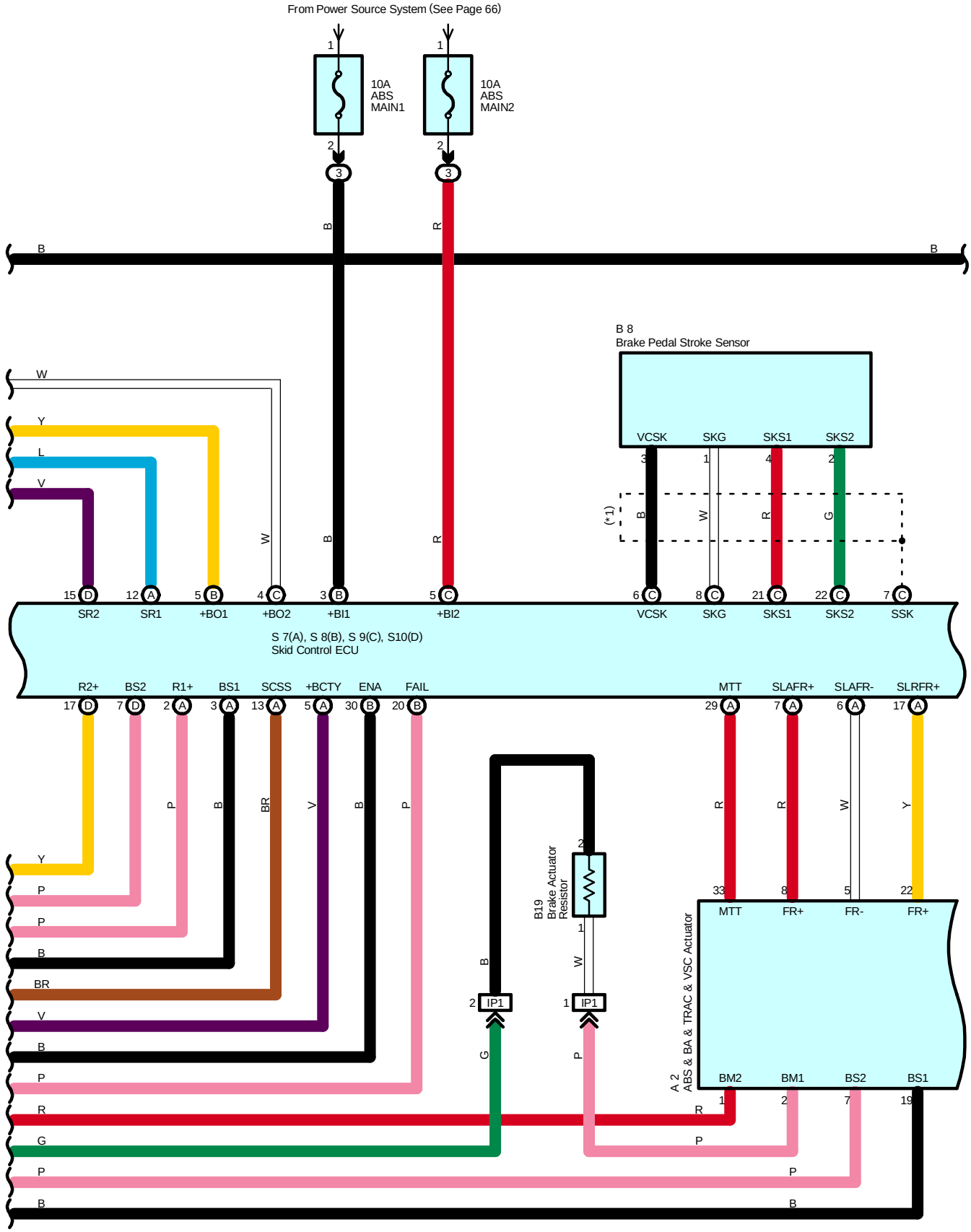
From Power Source System (See Page 66)
10A ABS MAIN1
10A ABS MAIN2
B 8
Brake Pedal Stroke Sensor
VCSK
SKG
SKS1
SKS2
SR2
SR1
+BO1
+BO2
+BI1
+BI2
SSK
S 7(A), S 8(B), S 9(C), S10(D)
Skid Control ECU
R2+
BS2
R1+
BS1
SCSS
+BCTY
ENA
FAIL
MTT
SLAFR+
SLAFR-
SLRFR+
B19
Brake Actuator Resistor
IP1
A 2
ABS & BA & TRAC & VSC Actuator
BM2
BM1
BS2
BS1
FR+
FR-

* 1 : Shielded

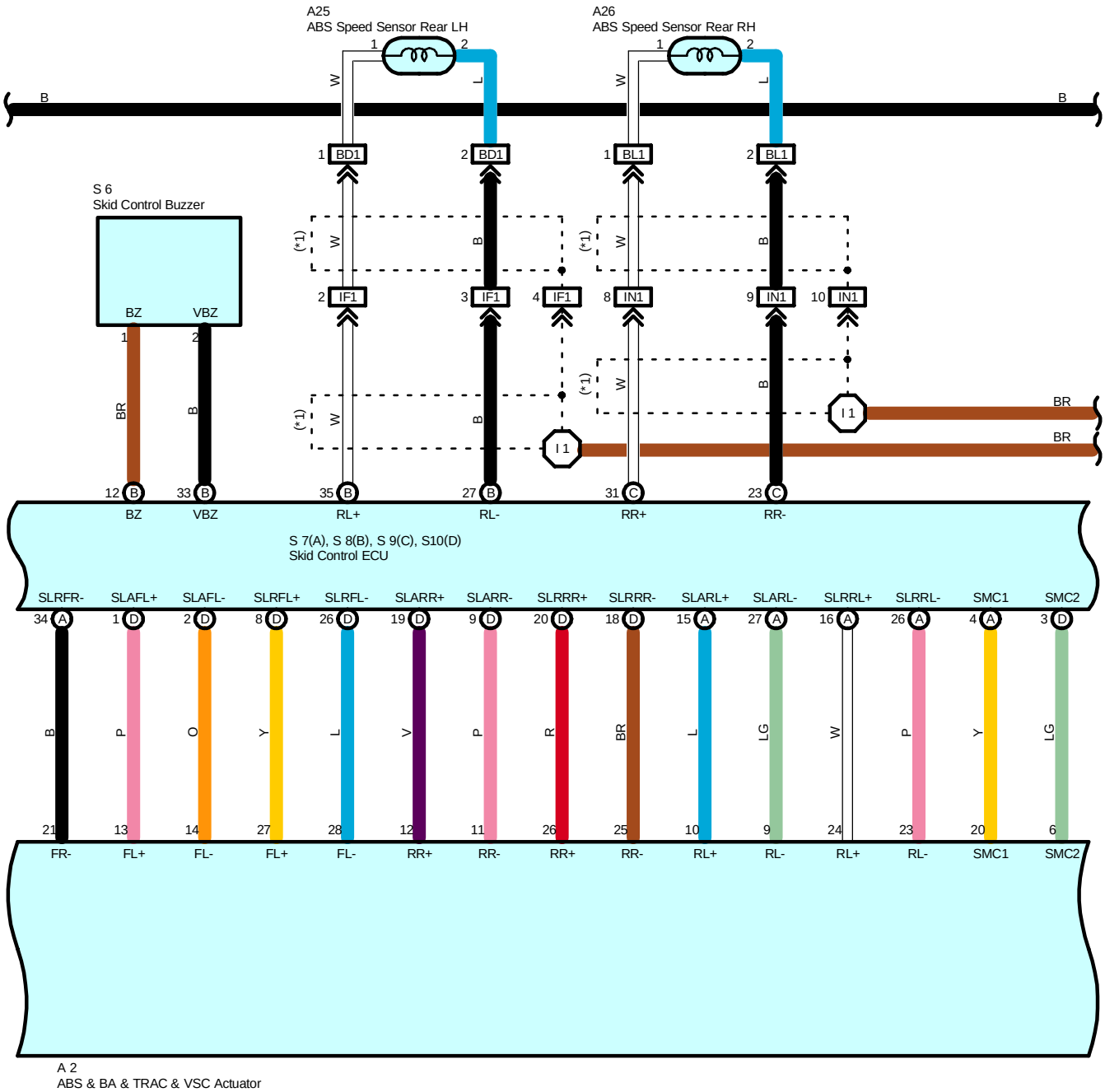
A25
ABS Speed Sensor Rear LH
A26
ABS Speed Sensor Rear RH
S 6
Skid Control Buzzer
BZ
VBZ
BD1
BL1
IF1
IN1
I 1
S 7(A), S 8(B), S 9(C), S10(D)
Skid Control ECU
SLRFR-
SLAFL+
SLAFL-
SLRFL+
SLRFL-
SLARR+
SLARR-
SLRRR+
SLRRR-
SLARL+
SLARL-
SLRRL+
SLRRL-
SMC1
SMC2
FR-
FL+
FL-
FL+
FL-
RR+
RR-
RR+
RR-
RL+
RL-
RL+
RL-
SMC1
SMC2
RL+
RL-
RR+
RR-
A 2
ABS & BA & TRAC & VSC Actuator

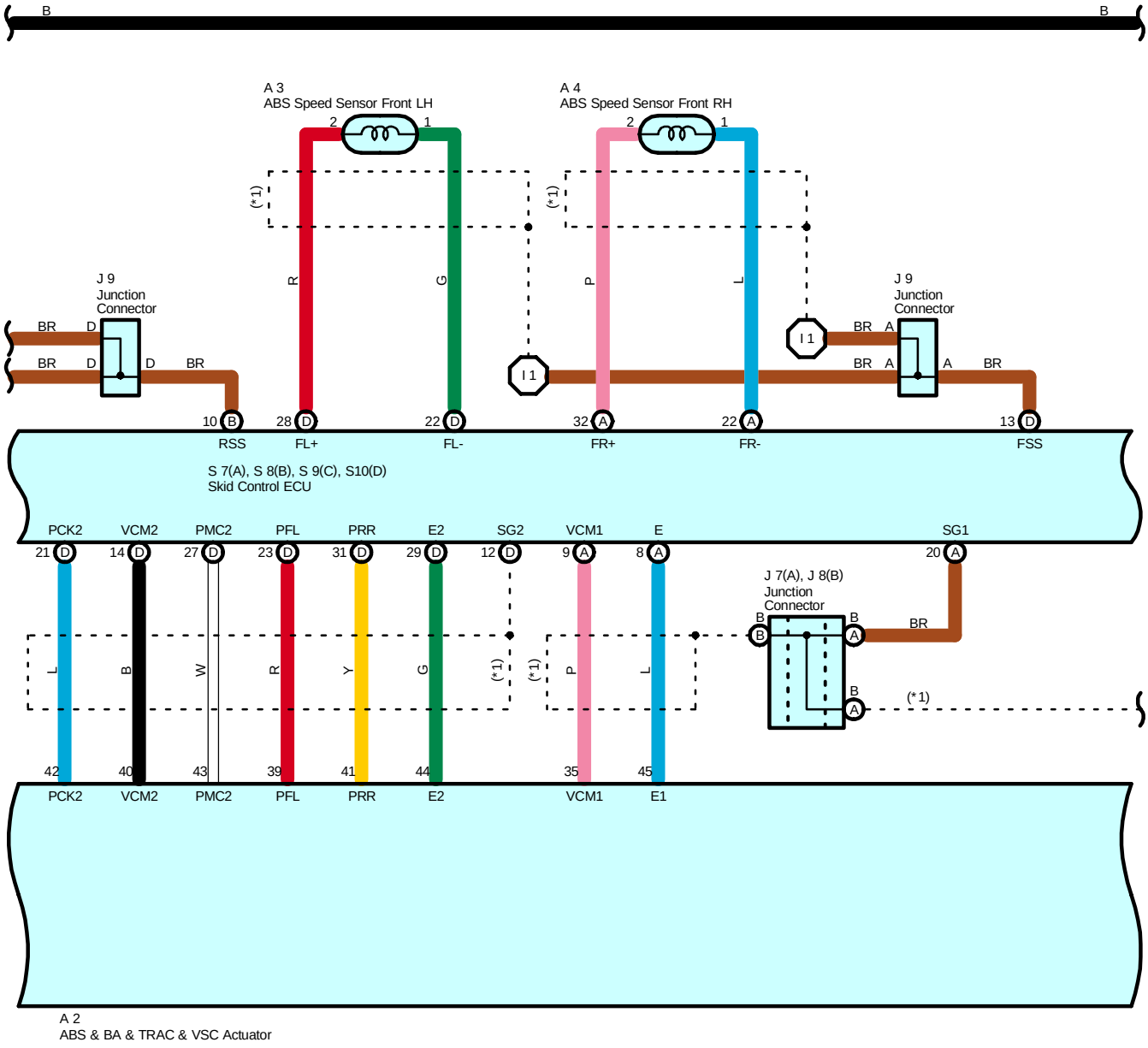
B
B
A 3
ABS Speed Sensor Front LH
A 4
ABS Speed Sensor Front RH
J 9
Junction
Connector
J 9
Junction
Connector
BR
D
BR
D
D
BR
I 1
BR
A
BR
A
A
BR
(*1)
R
G
P
L
10 B
RSS
28 D
FL+
22 D
FL-
32 A
FR+
22 A
FR-
13 D
FSS
S 7(A), S 8(B), S 9(C), S10(D)
Skid Control ECU
PCK2
VCM2
PMC2
PFL
PRR
E2
SG2
VCM1
E
SG1
21 D
14 D
27 D
23 D
31 D
29 D
12 D
9 A
8 A
20 A
J 7(A), J 8(B)
Junction
Connector
L
B
W
R
Y
G
P
L
BR
(*1)
42
PCK2
40
VCM2
43
PMC2
39
PFL
41
PRR
44
E2
35
VCM1
45
E1
A 2
ABS & BA & TRAC & VSC Actuator

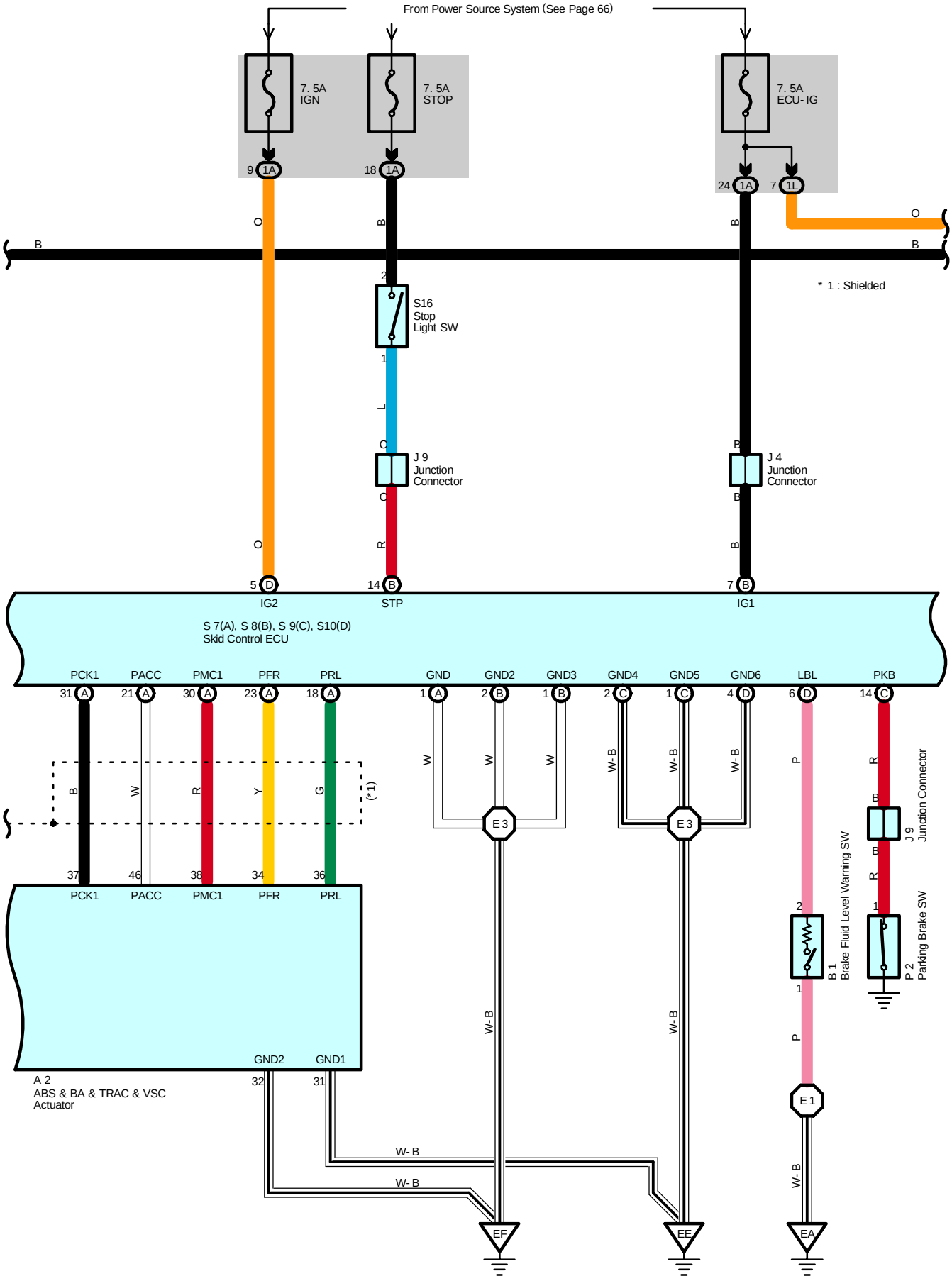
From Power Source System (See Page 66)
7. 5A
IGN
7. 5A
STOP
7. 5A
ECU- IG
9 1A
18 1A
24 1A
7 1L
O
B
B
B
O
B
B
* 1 : Shielded
2
S16
Stop
Light SW
1
L
O
J 9
Junction
Connector
O
R
B
J 4
Junction
Connector
B
B
5 D
IG2
14 B
STP
7 B
IG1
S 7(A), S 8(B), S 9(C), S10(D)
Skid Control ECU
PCK1
PACC
PMC1
PFR
PRL
GND
GND2
GND3
GND4
GND5
GND6
LBL
PKB
31 A
21 A
30 A
23 A
18 A
1 A
2 B
1 B
2 C
1 C
4 D
6 D
14 C
B
W
R
Y
G
(*1)
W
W
W
W-B
W-B
W-B
P
R
B
B
R
37
46
38
34
36
PCK1
PACC
PMC1
PFR
PRL
E 3
E 3
J 9
Junction Connector
2
1
B 1
Brake Fluid Level Warning SW
P 2
Parking Brake SW
P
GND2
GND1
32
31
A 2
ABS & BA & TRAC & VSC
Actuator
W-B
W-B
W-B
W-B
W-B
E 1
EF
EE
EA

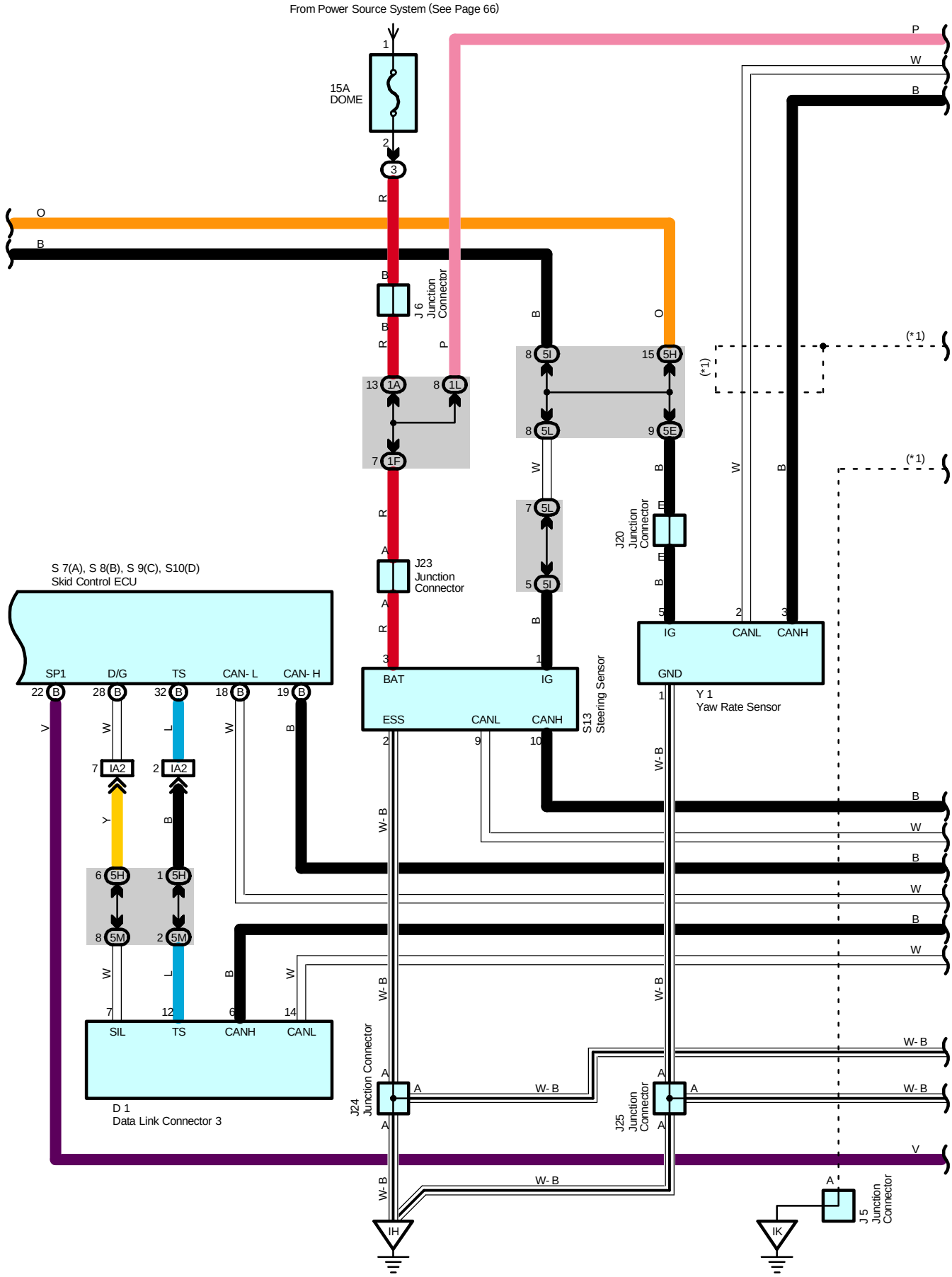
From Power Source System (See Page 66)
15A
DOME
J 6
Junction
Connector
J23
Junction
Connector
J20
Junction
Connector
S 7(A), S 8(B), S 9(C), S10(D)
Skid Control ECU
SP1
D/G
TS
CAN- L
CAN- H
SIL
TS
CANH
CANL
D 1
Data Link Connector 3
BAT
IG
ESS
CANL
CANH
S13
Steering Sensor
IG
CANL
CANH
GND
Y 1
Yaw Rate Sensor
J24
Junction Connector
J25
Junction Connector
J 5
Junction
Connector
IH
IK
(*1)
W- B

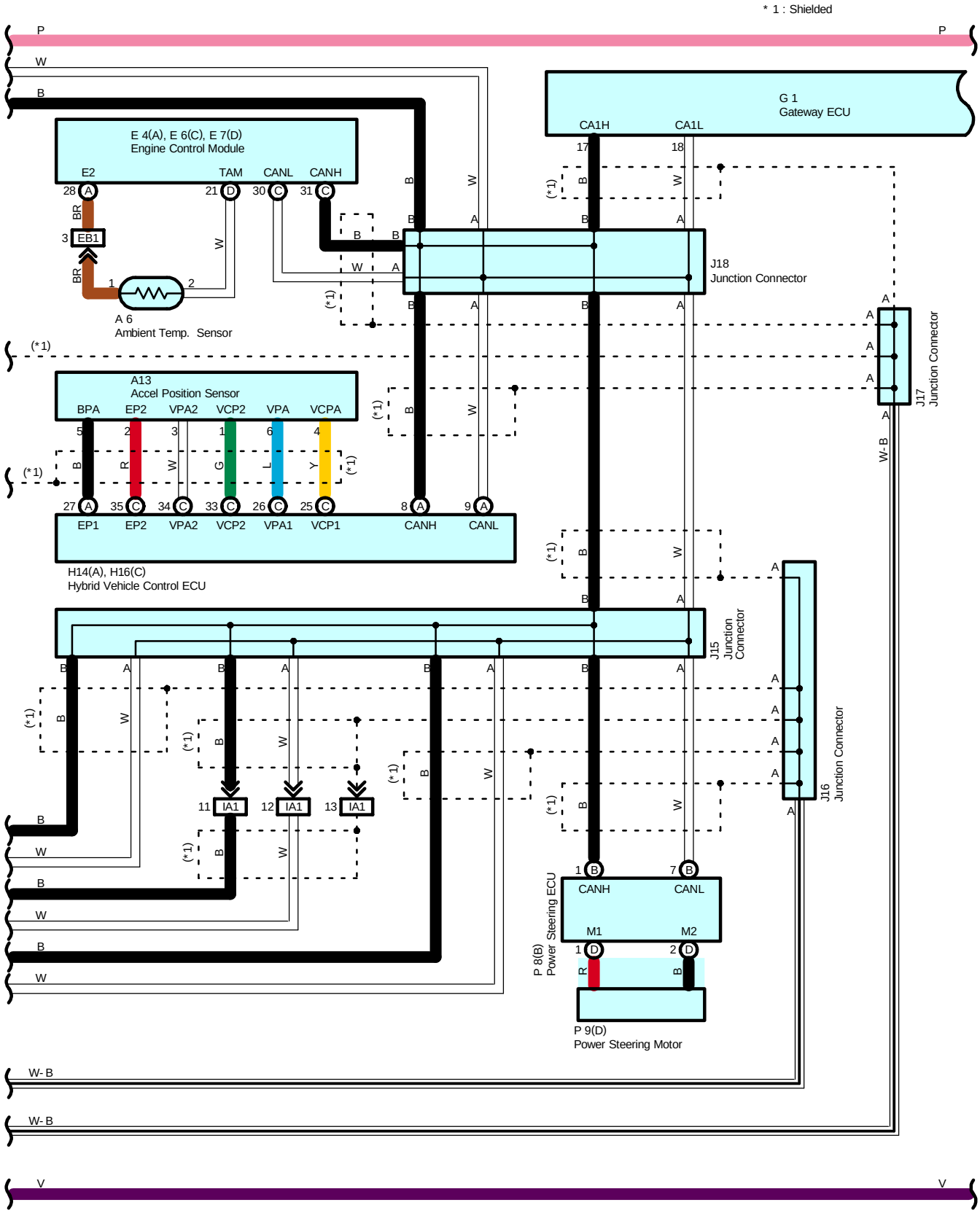
* 1 : Shielded
P
W
B
E 4(A), E 6(C), E 7(D)
Engine Control Module
E2
TAM
CANL
CANH
28 A
21 D
30 C
31 C
BR
3 EB1
W
1
2
A 6
Ambient Temp. Sensor
G 1
Gateway ECU
CA1H
CA1L
17
18
(*1)
J18
Junction Connector
J17
Junction Connector
W-B
A13
Accel Position Sensor
BPA
EP2
VPA2
VCP2
VPA
VCPA
5
2
3
1
6
4
R
G
L
Y
27 A
35 C
34 C
33 C
26 C
25 C
8 A
9 A
EP1
EP2
VPA2
VCP2
VPA1
VCP1
CANH
CANL
H14(A), H16(C)
Hybrid Vehicle Control ECU
J15
Junction
Connector
J16
Junction Connector
11 IA1
12 IA1
13 IA1
1 B
7 B
CANH
CANL
M1
M2
1 D
2 D
P 8(B)
Power Steering ECU
P 9(D)
Power Steering Motor
W-B
V

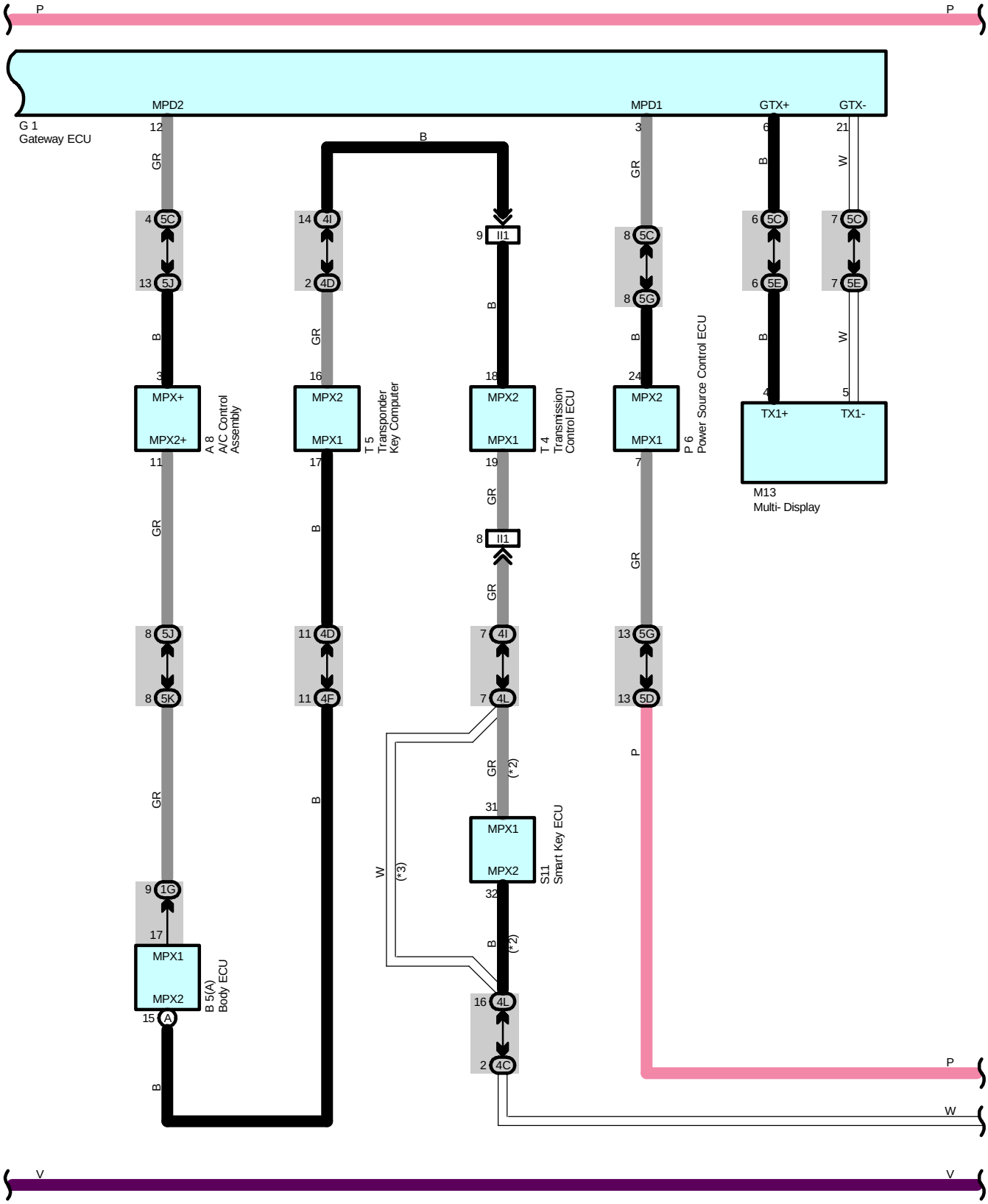
P
P
MPD2
MPD1
GTX+
GTX-
G 1
Gateway ECU
12
GR
4 5C
13 5J
B
3
MPX+
MPX2+
A 8
A/C Control
Assembly
11
GR
8 5J
8 5K
GR
9 1G
17
MPX1
MPX2
15 A
B 5(A)
Body ECU
B
14 4I
2 4D
GR
16
MPX2
MPX1
T 5
Transponder
Key Computer
17
B
11 4D
11 4F
B
9 II1
B
18
MPX2
MPX1
T 4
Transmission
Control ECU
19
GR
8 II1
GR
7 4I
7 4L
GR
(*2)
31
MPX1
MPX2
S11
Smart Key ECU
32
B
(*2)
W
(*3)
16 4L
2 4C
3
GR
8 5C
8 5G
B
24
MPX2
MPX1
P 6
Power Source Control ECU
7
GR
13 5G
13 5D
P
6
B
6 5C
6 5E
B
4
TX1+
TX1-
M13
Multi- Display
21
W
7 5C
7 5E
W
5
P
W
V
V

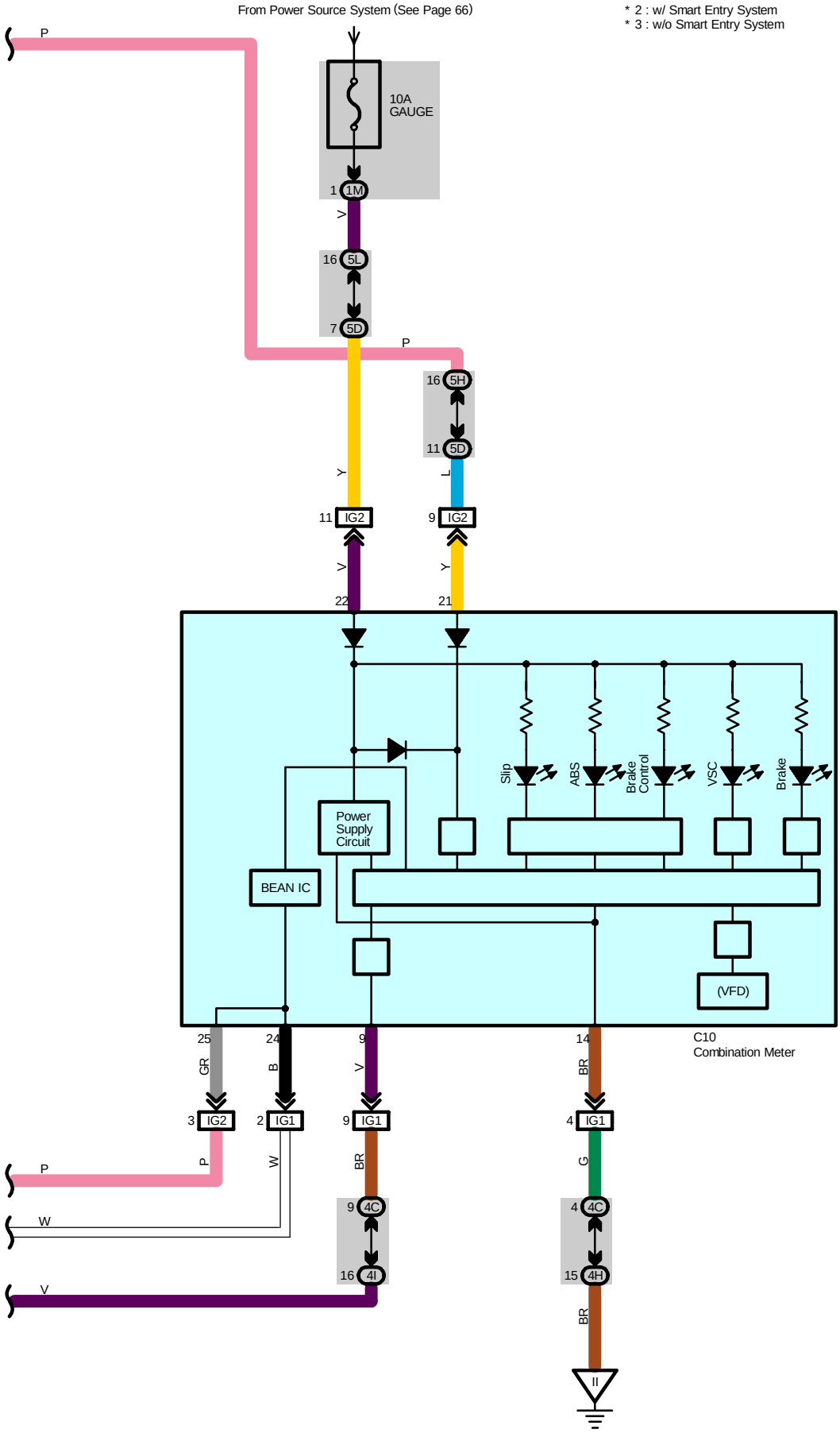
From Power Source System (See Page 66)
* 2 : w/ Smart Entry System
* 3 : w/o Smart Entry System
P
10A
GAUGE
1
1M
V
16
5L
7
5D
P
16
5H
11
5D
Y
L
11
IG2
9
IG2
V
Y
22
21
Slip
ABS
Brake Control
VSC
Brake
Power Supply Circuit
BEAN IC
(VFD)
25
24
9
14
GR
B
V
BR
C10
Combination Meter
3
IG2
2
IG1
9
IG1
4
IG1
P
W
BR
G
P
W
V
9
4C
16
4I
4
4C
15
4H
BR
II

System Outline

1. ABS Operation

If the brake pedal is depressed suddenly, the ABS controls the hydraulic pressure of all the four wheel cylinders to automatically avoid wheel locking and to ensure the directional and steering stability of the vehicle. Under the situation, the skid control ECU controls the solenoids in the actuators, using the signals from the sensors to move the brake fluid to the reservoir in order to release the braking pressure applied to the wheel cylinder. If the skid control ECU detects that the fluid pressure in the wheel cylinder is insufficient, the ECU controls the solenoids in the actuators to increase the braking pressure.

2. Electronic Brake-Force Distribution

Skid control ECU distributes appropriate brake-force to front and rear wheels (Control of brake-force distribution to front and rear wheels) corresponding to the vehicle driving conditions. It also makes effective use of rear wheel brake-force to match loading condition and decelerating of the vehicle, resulting to reduce depressing of brake pedal and to ensure effective braking. In braking during making a turn, the ECU controls appropriate brake-force distribution to right and left wheels (Control of brake-force distribution to right and left wheels) to ensure stability and braking of the vehicle.

3. Brake Assist System

Skid control ECU recognizes emergency braking from detecting applying speed of brake pedal and brake travel, and controls braking effectiveness to supply strong brake-force for the emergency braking.

4. VSC Operation (w/ VSC)

Unexpected road conditions, emergency situation, and any other external factors may cause large under- or over-steering of the vehicle. If they occur, the VSC system automatically controls the driving power and wheel brakes to reduce the under- or over-steering.

To reduce large over-steering :

If the VSC system determines that the over-steering is large, it activates the brakes for the outer turning wheels depending on the degree of the over-steering to produce the moment toward the outside of the vehicle and reduce the over-steering.

To reduce large under-steering :

If the VSC system determines that the under-steering is large, it controls the driving power and activates the front wheel brakes and rear inner side wheel brake to reduce the under-steering.

If there is malfunction in the VSC system, the VSC indicator lights up to warn the driver.

5. Mutual System Control

Due to cooperative control with hybrid vehicle control ECU, skid control ECU controls hydraulic brake to collect much electrical energy by making the most use of regenerative brake.

Skid control ECU also improves stability of the vehicle, performing cooperative control with power steering ECU to give steering torque assistance, corresponding to driving conditions. (w/ VSC)

6. Electric Source Backup Function

Electric charge is stored in brake control power supply. If voltage of vehicle electricity is declined, electric charge is released to cover electric supply to the system.

7. Fail Safe Function

Skid control ECU monitors the system component parts electrically. In case there is abnormality in ECU, sensor signal and actuator, normal parts except parts with abnormality continue braking operation.

Even in case braking is shut off due to malfunction of oil pressure source, braking is secured as master cylinder pressure made by manpower works on wheel cylinder.

In case only regenerative brake is not effective due to abnormality in communication with hybrid vehicle control ECU, control will be changed to have oil pressure brake generate all the braking force

Service Hints

S7 (A), S8 (B), S9 (C), S10 (D) Skid Control ECU

(B) 3, (C) 5-Ground : Always approx. 12 volts
(B) 7, (D) 5-Ground : Approx. 12 volts with the power SW at IG ON position
(B)14-Ground : Approx. 12 volts with the brake pedal depressed
(A) 1, (B) 1, (B) 2, (C) 1, (C) 2, (D) 4-Ground : Always continuity

: Parts Location

Code	See Page	Code	See Page	Code	See Page
A2	44	E7 D	47	M13	48
A3	44	G1	47	P2	49
A4	44	H14 A	47	P6	49
A6	44	H16 C	47	P8 B	49
A8	46	J1	45	P9 D	49
A13	46	J4	45	S2 A	45
A25	50	J5	48	S3 B	45
A26	50	J6	48	S6	49
B1	44	J7 A	48	S7 A	49
B5 A	46	J8 B	48	S8 B	49
B8	46	J9	48	S9 C	49
B17	44	J15	48	S10 D	49
B18	50	J16	48	S11	49
B19	46	J17	48	S13	49
C10	47	J18	48	S16	49
D1	47	J20	48	T4	49
D7	50	J23	48	T5	49
E4 A	47	J24	48	Y1	49
E6 C	47	J25	48		

: Relay Blocks

Code	See Page	Relay Blocks (Relay Block Location)
3	22	Engine Room R/B (Engine Compartment Left)

: Junction Block and Wire Harness Connector

Code	See Page	Junction Block and Wire Harness (Connector Location)
1A	28	Engine Room Main Wire and Driver Side J/B (Lower Finish Panel)
1D	28	Floor Wire and Driver Side J/B (Lower Finish Panel)
1F	28	Instrument Panel Wire and Driver Side J/B (Lower Finish Panel)
1G		
1L	29	
1M		
3C	23	Engine Room Main Wire and Engine Room J/B (Engine Compartment Left)
4C	36	Instrument Panel Wire and Center Connector No.1 (Behind the Combination Meter)
4D		
4F		
4H		
4I		
4L		
5C	40	Instrument Panel Wire and Center Connector No.2 (Instrument Panel Brace RH)
5D		
5E		
5G		
5H		
5I		
5J		
5K		
5L		
5M		

: Connector Joining Wire Harness and Wire Harness

Code	See Page	Joining Wire Harness and Wire Harness (Connector Location)
EB1	54	Engine Wire and Engine Room Main Wire (Inside of the Engine Room R/B)
IA1	56	Engine Room Main Wire and Instrument Panel Wire (Upper Parts of Front Body Pillar LH)
IA2		
IF1	56	Floor Wire and Engine Room Main Wire (Left Kick Panel)
IG1	58	Instrument Panel Wire and Instrument Panel No.2 Wire (Behind the Combination Meter)
IG2		
II1	58	Engine Wire and Instrument Panel Wire (Behind the Glove Box)
IK1	58	Engine Room Main Wire and Floor No.2 Wire (Cowl Side Panel RH)
IM1	58	Instrument Panel Wire and Floor No.2 Wire (Right Kick Panel)
IN1	58	Floor No.2 Wire and Engine Room Main Wire (Right Kick Panel)
IP1	58	Engine Room No.2 Wire and Engine Room Main Wire (Upper Parts of Front Body Pillar LH)
BD1	60	Skid Control Sensor No.1 Wire and Floor Wire (Front Side of Left Quarter Panel)
BL1	62	Skid Control Sensor No.2 Wire and Floor No.2 Wire (Front Side of Right Quarter Panel)

: Ground Points

Code	See Page	Ground Points Location
EA	54	Right Side of the Fender Apron
EE	54	Left Side of the Suspension Tower
EF		
IH	56	Cowl Side Panel LH
II	56	Instrument Panel Brace LH
IK	56	Cowl Side Panel RH
BQ	60	Rear Side of Right Quarter Panel

: Splice Points

Code	See Page	Wire Harness with Splice Points	Code	See Page	Wire Harness with Splice Points
E1	54	Engine Room Main Wire	I1	58	Instrument Panel Wire
E3					

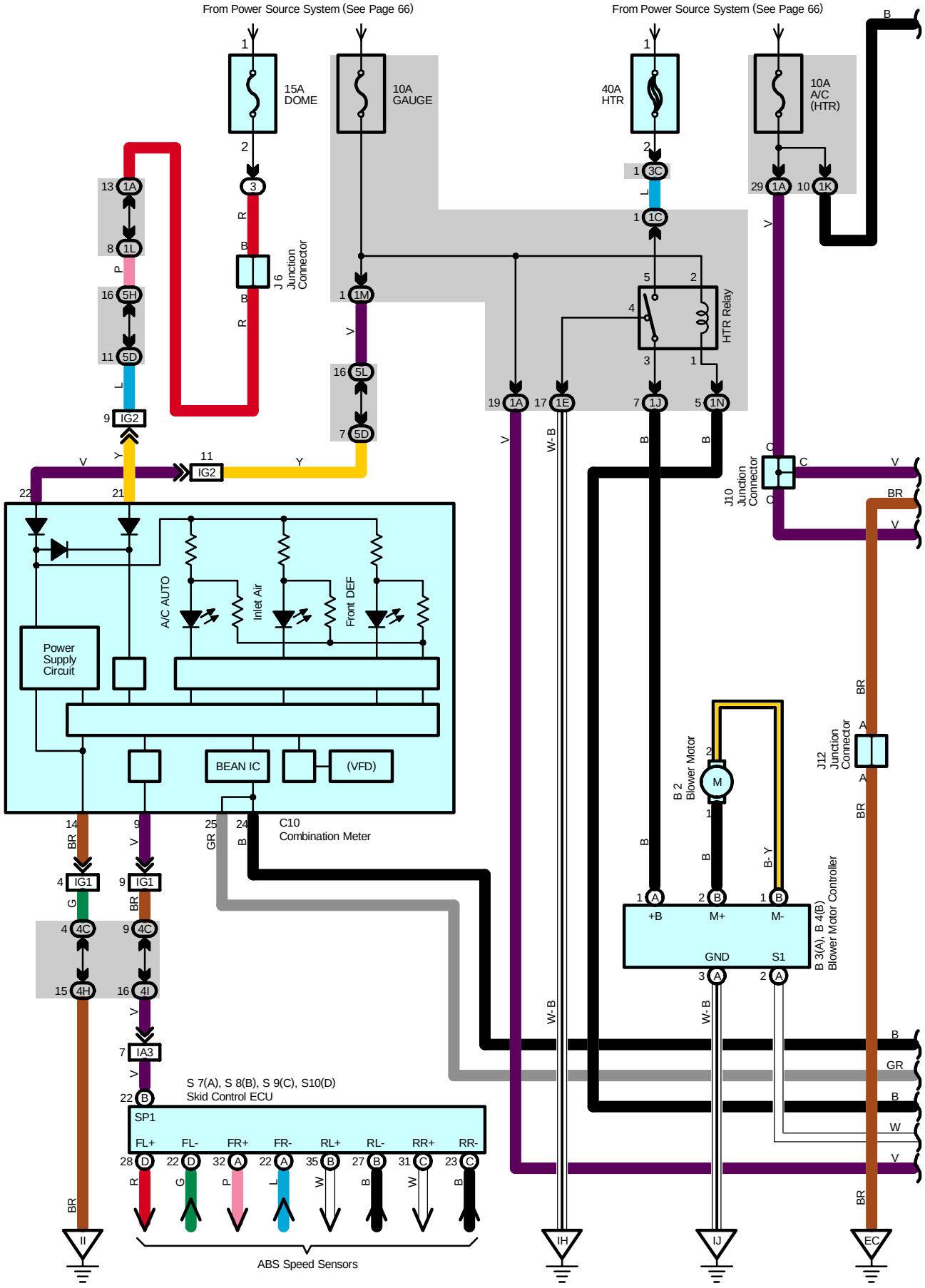
From Power Source System (See Page 66)
From Power Source System (See Page 66)
15A DOME
10A GAUGE
40A HTR
10A A/C (HTR)
J 6 Junction Connector
HTR Relay
J10 Junction Connector
J12 Junction Connector
B 2 Blower Motor
B 3(A), B 4(B) Blower Motor Controller
+B
M+
M-
GND
S1
Power Supply Circuit
A/C AUTO
Inlet Air
Front DEF
BEAN IC
(VFD)
C10 Combination Meter
S 7(A), S 8(B), S 9(C), S10(D) Skid Control ECU
SP1
FL+
FL-
FR+
FR-
RL+
RL-
RR+
RR-
ABS Speed Sensors
IG1
IG2
IA3
IL
IH
IJ
EC

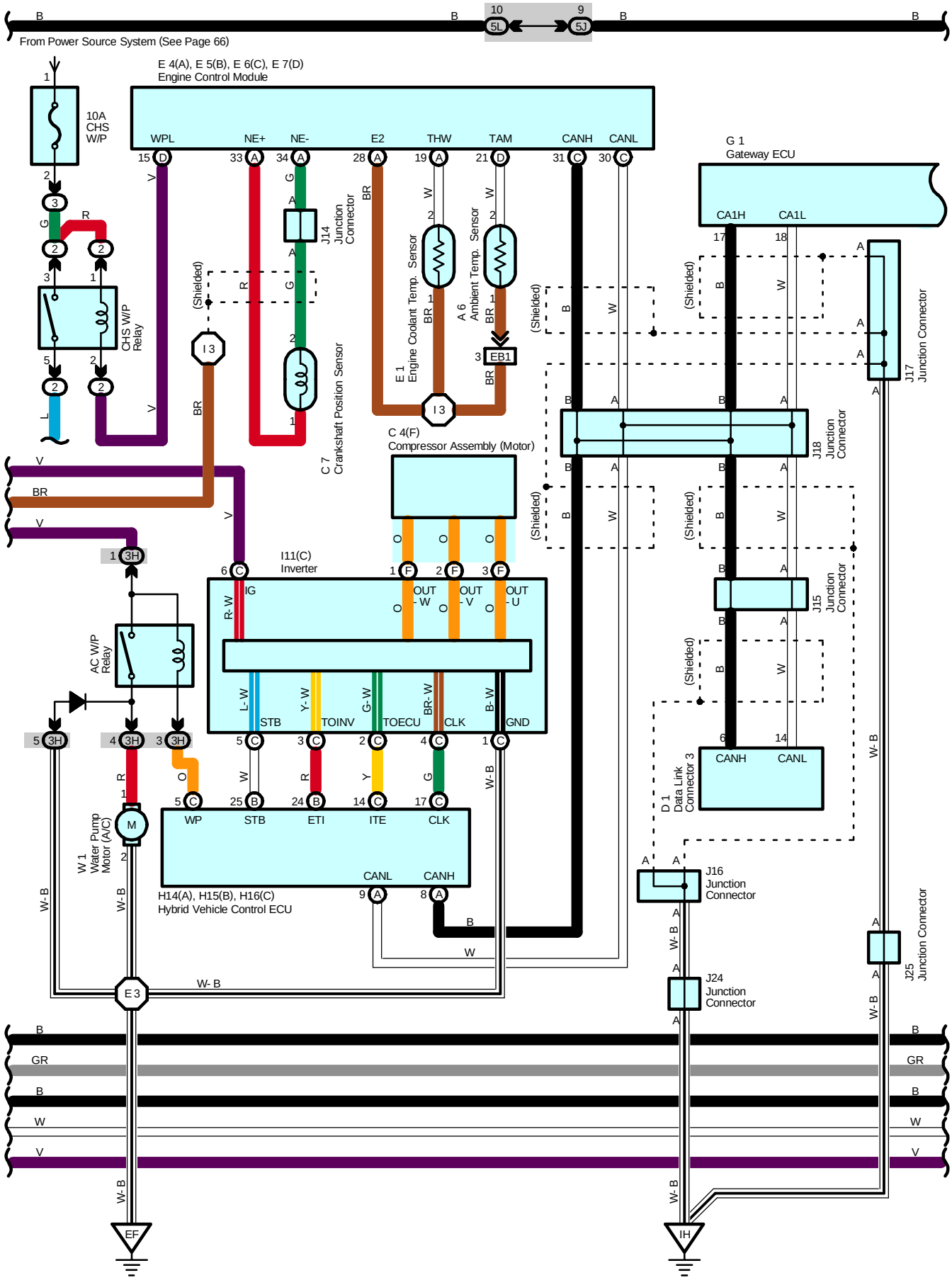
From Power Source System (See Page 66)
10
5L
9
5J
E 4(A), E 5(B), E 6(C), E 7(D)
Engine Control Module
10A
CHS
W/P
WPL
NE+
NE-
E2
THW
TAM
CANH
CANL
CHS W/P
Relay
J14
Junction
Connector
E 1
Engine Coolant Temp. Sensor
A 6
Ambient Temp. Sensor
EB1
I 3
C 7
Crankshaft Position Sensor
(Shielded)
G 1
Gateway ECU
CA1H
CA1L
J17
Junction Connector
J18
Junction Connector
J15
Junction Connector
C 4(F)
Compressor Assembly (Motor)
I11(C)
Inverter
IG
OUT - W
OUT - V
OUT - U
STB
TOINV
TOECU
CLK
GND
AC W/P
Relay
W 1
Water Pump
Motor (A/C)
WP
STB
ETI
ITE
CLK
CANL
CANH
H14(A), H15(B), H16(C)
Hybrid Vehicle Control ECU
D 1
Data Link
Connector 3
J16
Junction
Connector
J24
Junction
Connector
J25
Junction Connector
E 3
EF
IH
W- B
GR

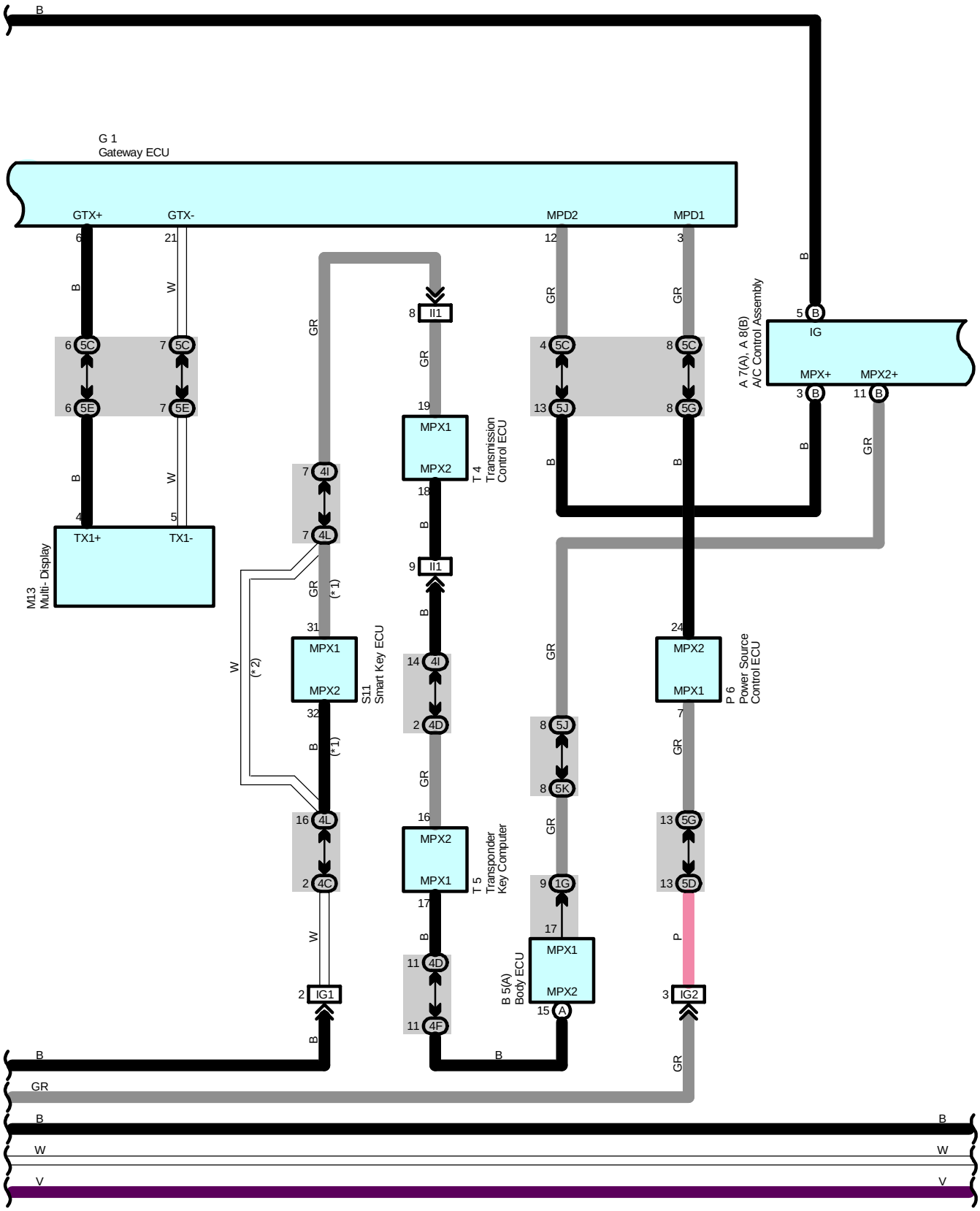
B
G 1
Gateway ECU
GTX+
GTX-
MPD2
MPD1
6
21
12
3
B
W
GR
GR
6 5C
7 5C
4 5C
8 5C
6 5E
7 5E
13 5J
8 5G
B
W
B
B
4
5
TX1+
TX1-
M13
Multi- Display
8 II1
GR
19
MPX1
MPX2
T 4
Transmission
Control ECU
18
B
9 II1
B
7 4I
7 4L
GR
(*1)
31
MPX1
MPX2
S11
Smart Key ECU
W
(*2)
32
B
(*1)
16 4L
2 4C
W
2 IG1
B
14 4I
2 4D
GR
16
MPX2
MPX1
T 5
Transponder
Key Computer
17
B
11 4D
11 4F
B
GR
8 5J
8 5K
GR
9 1G
17
MPX1
MPX2
B 5(A)
Body ECU
15 A
B
5 B
IG
A 7(A), A 8(B)
A/C Control Assembly
MPX+
MPX2+
3 B
11 B
B
GR
24
MPX2
MPX1
P 6
Power Source
Control ECU
7
GR
13 5G
13 5D
P
3 IG2
GR
B
GR
B
W
V
B
W
V

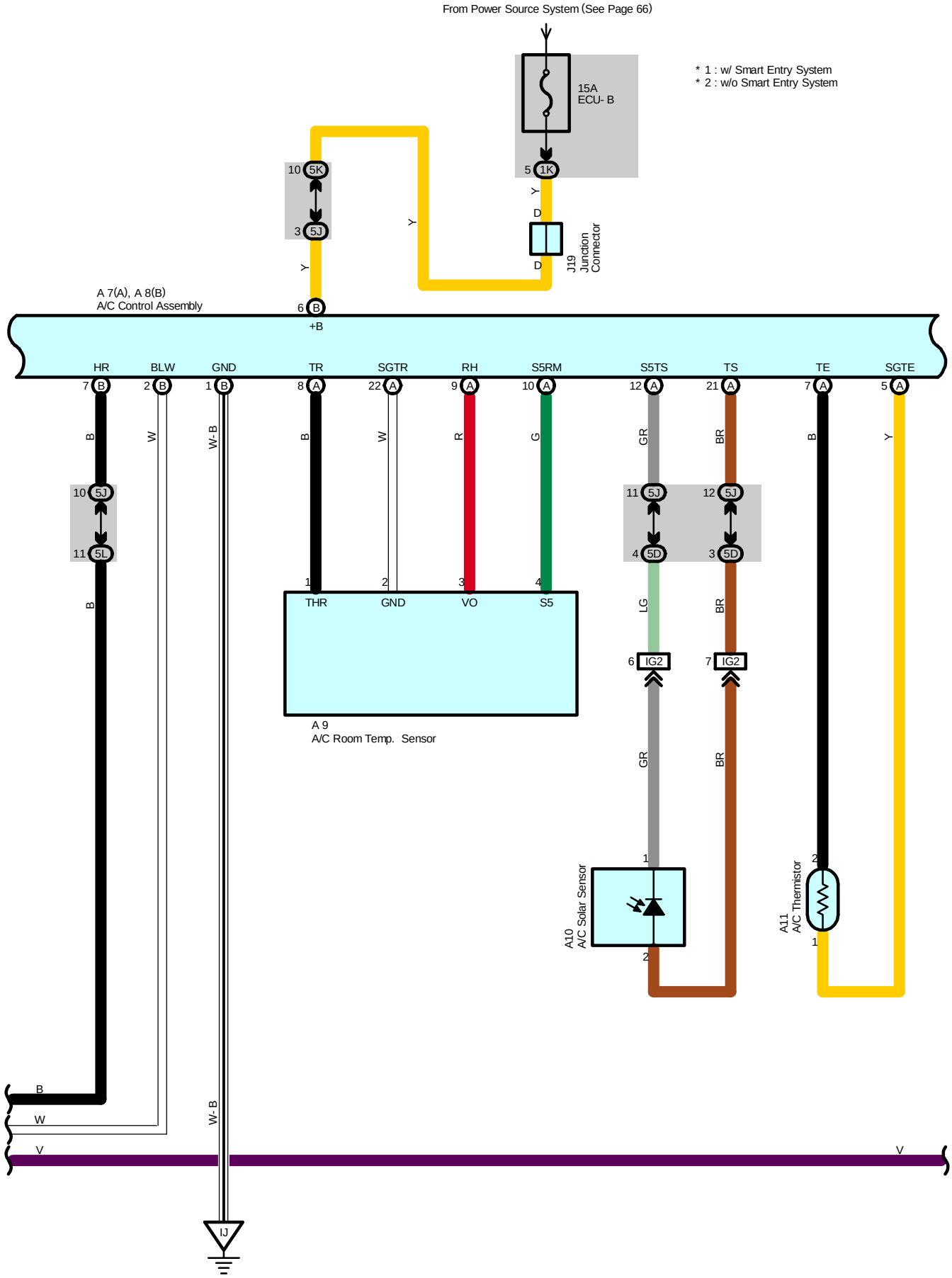
From Power Source System (See Page 66)
15A
ECU- B
* 1 : w/ Smart Entry System
* 2 : w/o Smart Entry System
10 5K
3 5J
5 1K
Y
D
J19
Junction
Connector
A 7(A), A 8(B)
A/C Control Assembly
6 B
+B
HR
BLW
GND
TR
SGTR
RH
S5RM
S5TS
TS
TE
SGTE
7 B
2 B
1 B
8 A
22 A
9 A
10 A
12 A
21 A
7 A
5 A
B
W
W- B
G
GR
BR
LG
10 5J
11 5L
11 5J
12 5J
4 5D
3 5D
1
2
3
4
THR
GND
VO
S5
A 9
A/C Room Temp. Sensor
6 IG2
7 IG2
A10
A/C Solar Sensor
A11
A/C Thermistor
V
IJ

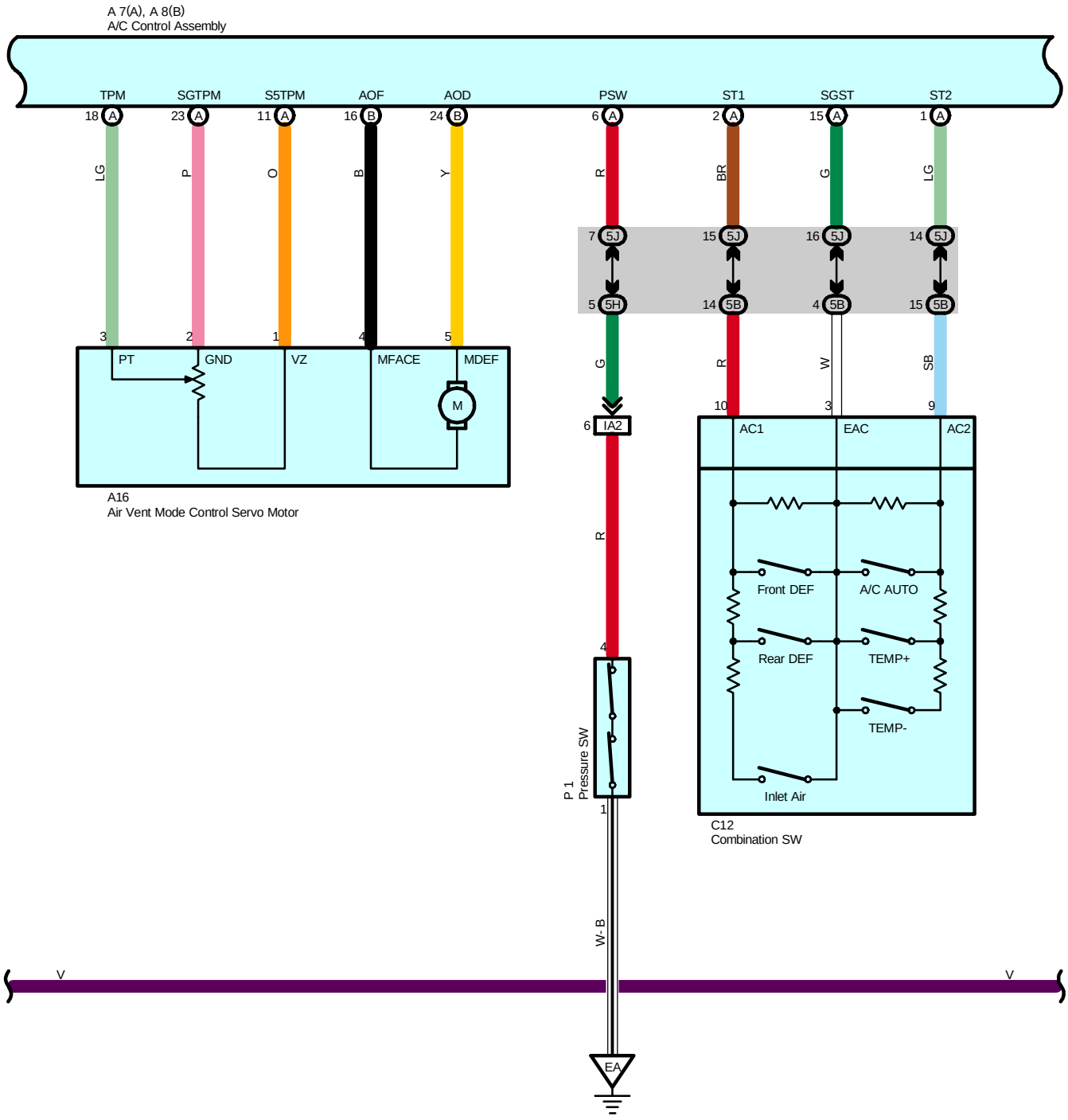
A 7(A), A 8(B)
A/C Control Assembly
TPM
SGTPM
S5TPM
AOF
AOD
PSW
ST1
SGST
ST2
18 A
23 A
11 A
16 B
24 B
6 A
2 A
15 A
1 A
LG
P
O
B
Y
R
BR
G
LG
7 5J
15 5J
16 5J
14 5J
5 5H
14 5B
4 5B
15 5B
3
2
1
4
5
PT
GND
VZ
MFACE
MDEF
M
A16
Air Vent Mode Control Servo Motor
G
R
W
SB
10
3
9
6 IA2
AC1
EAC
AC2
R
Front DEF
A/C AUTO
Rear DEF
TEMP+
TEMP-
Inlet Air
C12
Combination SW
4
P 1
Pressure SW
1
W- B
V
V
EA

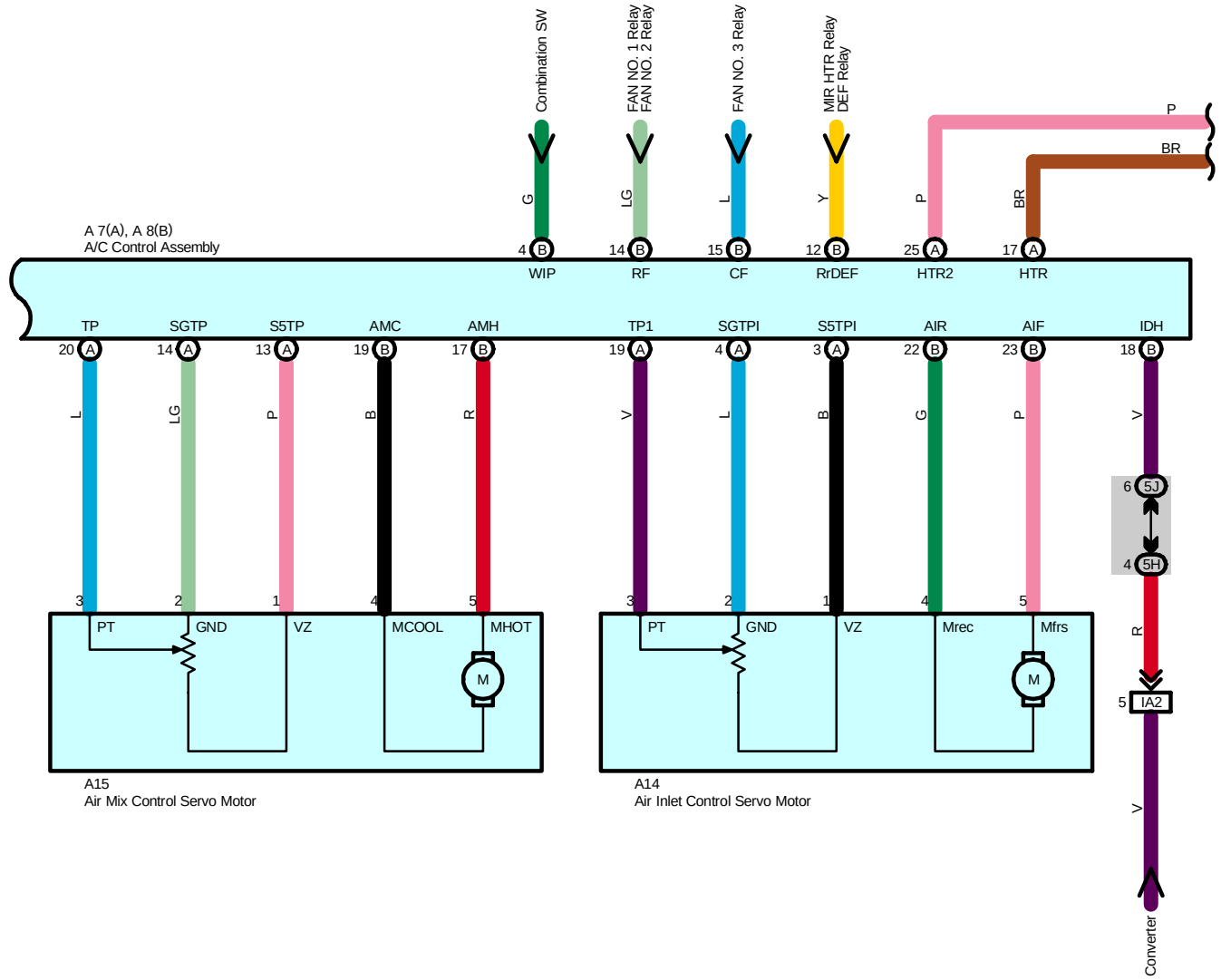
Combination SW
FAN NO. 1 Relay
FAN NO. 2 Relay
FAN NO. 3 Relay
MIR HTR Relay
DEF Relay
A 7(A), A 8(B)
A/C Control Assembly
WIP
RF
CF
RrDEF
HTR2
HTR
TP
SGTP
S5TP
AMC
AMH
TP1
SGTPI
S5TPI
AIR
AIF
IDH
PT
GND
VZ
MCOOL
MHOT
Mrec
Mfrs
A15
Air Mix Control Servo Motor
A14
Air Inlet Control Servo Motor
IA2
Converter



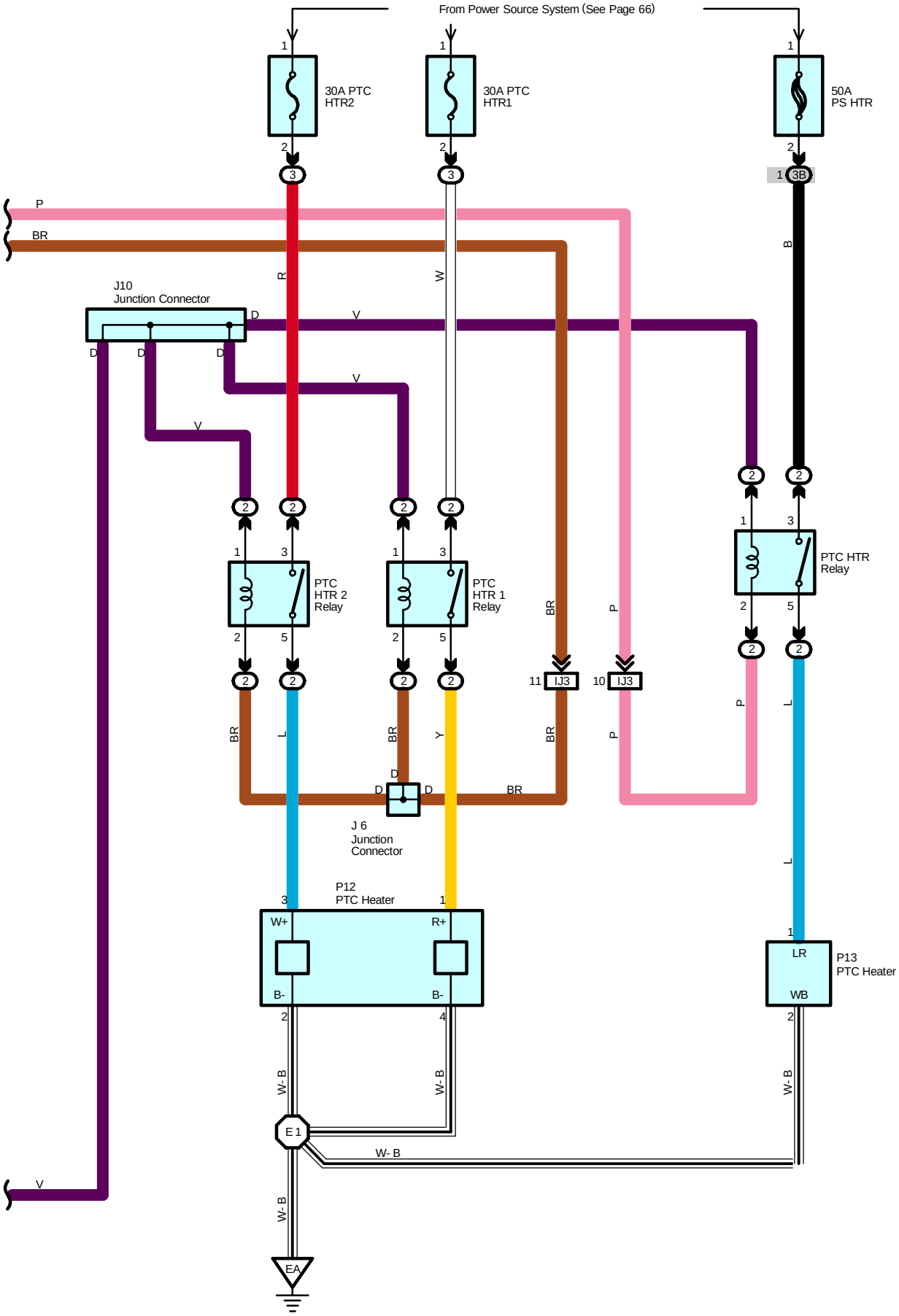
From Power Source System (See Page 66)
30A PTC HTR2
30A PTC HTR1
50A PS HTR
3B
P
BR
R
W
B
J10 Junction Connector
D
V
PTC HTR 2 Relay
PTC HTR 1 Relay
PTC HTR Relay
IJ3
J 6 Junction Connector
P12 PTC Heater
W+
R+
B-
P13 PTC Heater
LR
WB
L
Y
W- B
E 1
EA

System Outline

Air conditioning system operates when SW of multi-display or that of steering wheel is turned on. Turning on the SW sends signal to A/C control assembly, running the air conditioning system.

1. Heater Blower Operation

Manual operation

When the blower speed is set to a certain level using the blower control SW, the A/C control assembly sends the signals to the blower control to control the blower motor speed.

Auto operation

When the auto SW is pushed, the A/C control assembly calculates necessary blower speed from setting of SWs and input of the sensors and sends the signals to the blower control to automatically control the blower motor speed.

2. Air Inlet Control Servo Motor Control

When the FRESH/RECIRC select SW is set to RECIRC, the air inlet control servo motor starts rotating to move the damper toward the RECIRC side. The damper position is detected by the TERMINAL TPI of the A/C control assembly. The motor continuously rotates until the damper reaches its stop position. When the FRESH/RECIRC select SW is set to FRESH, the air inlet control servo motor starts rotating to move the damper toward the FRESH side. The damper position is detected by the TERMINAL TPI of the A/C control assembly. The motor continuously rotates until the damper reaches its stop position.

In auto mode, A/C control assembly controls the damper to move to the best position for the conditions without operating the mode select SW.

3. Air Vent Mode Control Servo Motor Control

When the mode select SW is pushed, the ECU in the A/C control assembly activates the air vent mode control servo motor. The servo motor rotates to the position (FACE, BI-LEVEL, FOOT, FOOT/DEF, DEF) selected by using the mode select SW, and moves the damper.

In auto mode, A/C control assembly controls the damper to move to the best position for the conditions without operating the mode select SW.

4. Air Mix Control Servo Motor Control

Based on the set temperature by the temperature control SW, the ECU in the A/C control assembly sends a signal to the air mix control servo motor. This signal drives the motor to reach the temperature set by the temperature control SW, and moves the film damper.

5. Humidity Sensor Control

A/C control assembly detects humidity in passenger room when A/C is turned on, with humidity detecting function of A/C room temp. sensor and controls to dehumidify for comfortable condition

6. Air Conditioning Operation

A/C control assembly calculates target cooled temperature from information such as that of operating SWs, room temperature, humidity, ambient temperature and insolation to have target running speed of compressor assembly (Motor). The calculated control signal is sent to inverter to drive compressor assembly (Motor) (Electric motor) with control of inverter, resulting in operating A/C.

Service Hints

P1 Pressure SW

1-4 : Open with the refrigerant pressure at less than approx. 196 kpa (2.0 kgf/cm^2, 28.4 psi) or more than approx. 3140 kpa (32 kgf/cm^2, 455 psi)

A8 (B) A/C Control Assembly

(B) 6-Ground : Always approx. 12 volts
(B) 5-Ground : Approx. 12 volts with the power SW at IG ON position
(B) 1-Ground : Always continuity

: Parts Location

Code	See Page	Code	See Page	Code	See Page
A6	44	E1	44	J19	48
A7 A	46	E4 A	47	J24	48
A8 B	46	E5 B	47	J25	48
A9	46	E6 C	47	M13	48
A10	46	E7 D	47	P1	45
A11	46	G1	47	P6	49
A14	46	H14 A	47	P12	49
A15	46	H15 B	47	P13	49
A16	46	H16 C	47	S7 A	49
B2	46	I11 C	45	S8 B	49
B3 A	46	J6	48	S9 C	49
B4 B	46	J10	48	S10 D	49
B5 A	46	J12	48	S11	49
C4 F	44	J14	48	T4	49
C7	44	J15	48	T5	49
C10	47	J16	48	W1	45
C12	47	J17	48		
D1	47	J18	48		

: Relay Blocks

Code	See Page	Relay Blocks (Relay Block Location)
2	27	Engine Room R/B No.2 (Right Side of Reserve Tank)
3	22	Engine Room R/B (Engine Compartment Left)

: **Junction Block and Wire Harness Connector**

Code	See Page	Junction Block and Wire Harness (Connector Location)
1A	28	Engine Room Main Wire and Driver Side J/B (Lower Finish Panel)
1C		
1E	28	Instrument Panel Wire and Driver Side J/B (Lower Finish Panel)
1G		
1J		
1K	29	
1L		
1M		
1N		
3B	23	Engine Room Main Wire and Engine Room J/B (Engine Compartment Left)
3C		
3H	24	
4C	36	Instrument Panel Wire and Center Connector No.1 (Behind the Combination Meter)
4D		
4F		
4H		
4I		
4L		
5B	40	Instrument Panel Wire and Center Connector No.2 (Instrument Panel Brace RH)
5C		
5D		
5E		
5G		
5H		
5J		
5K		
5L		

: **Connector Joining Wire Harness and Wire Harness**

Code	See Page	Joining Wire Harness and Wire Harness (Connector Location)
EB1	54	Engine Wire and Engine Room Main Wire (Inside of the Engine Room R/B)
IA2	56	Engine Room Main Wire and Instrument Panel Wire (Upper Parts of Front Body Pillar LH)
IA3		
IG1	58	Instrument Panel Wire and Instrument Panel No.2 Wire (Behind the Combination Meter)
IG2		
II1	58	Engine Wire and Instrument Panel Wire (Behind the Glove Box)
IJ3	58	Engine Room Main Wire and Instrument Panel Wire (Behind the Glove Box)

: **Ground Points**

Code	See Page	Ground Points Location
EA	54	Right Side of the Fender Apron
EC	54	Engine Block
EF	54	Left Side of the Suspension Tower
IH	56	Cowl Side Panel LH
II	56	Instrument Panel Brace LH
IJ	56	Instrument Panel Brace RH

 : **Splice Points**

Code	See Page	Wire Harness with Splice Points	Code	See Page	Wire Harness with Splice Points
E1	54	Engine Room Main Wire	I3	58	Engine
E3					

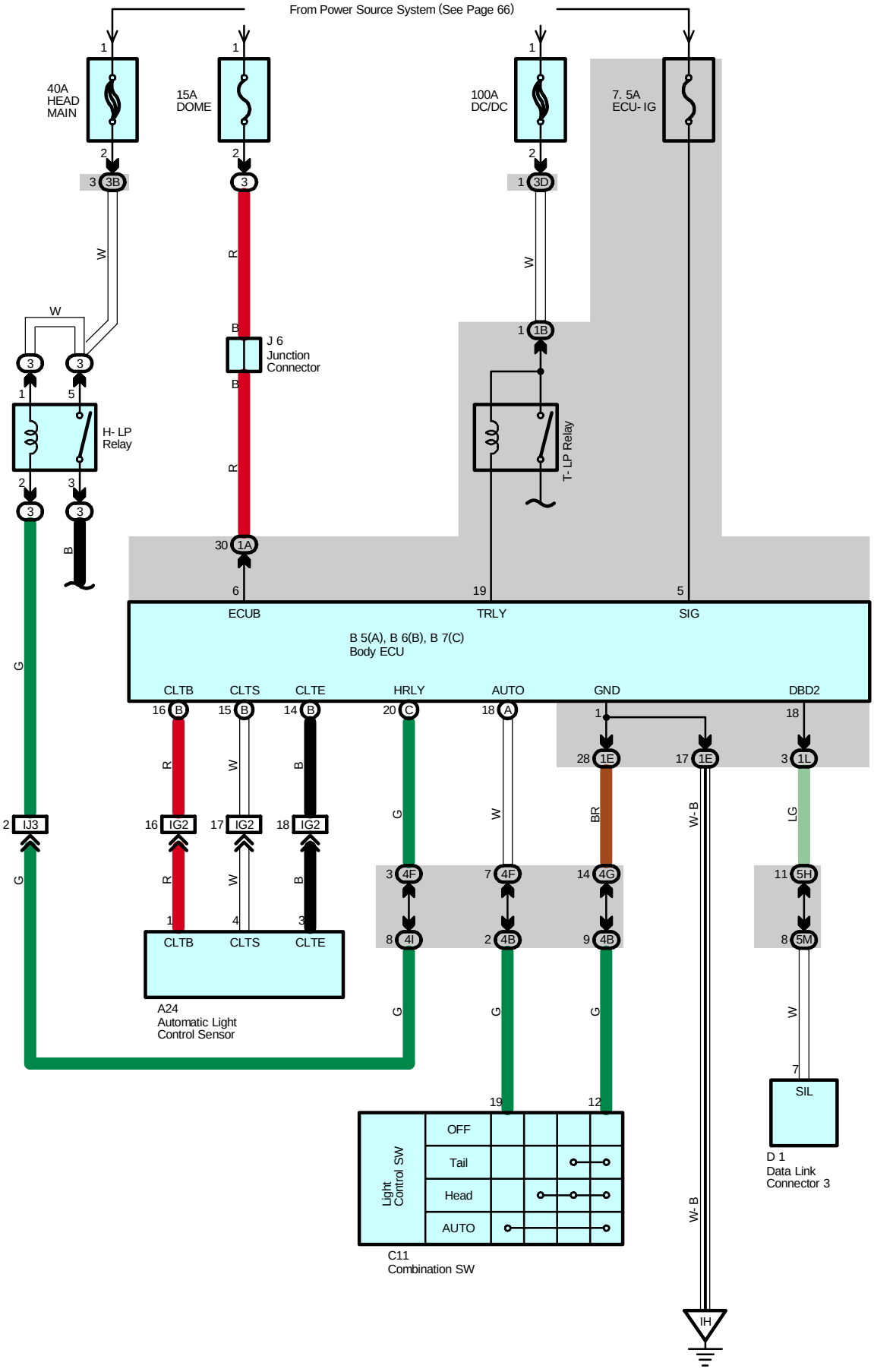
From Power Source System (See Page 66)
40A HEAD MAIN
15A DOME
100A DC/DC
7. 5A ECU- IG
3B
3D
1B
J 6 Junction Connector
H- LP Relay
T- LP Relay
1A
ECUB
TRLY
SIG
B 5(A), B 6(B), B 7(C) Body ECU
CLTB
CLTS
CLTE
HRLY
AUTO
GND
DBD2
IJ3
IG2
4F
4I
4B
4G
1E
1L
5H
5M
A24 Automatic Light Control Sensor
Light Control SW
OFF
Tail
Head
AUTO
C11 Combination SW
SIL
D 1 Data Link Connector 3
IH

System Outline

The automatic light control system works when the light control SW is turned to AUTO. The automatic light control sensor detects the brightness around the vehicle. By this function, the system automatically turns on the taillight and headlight if the brightness is below the certain level and turns off the taillight and headlight when the surroundings become brighter than the certain level.

Service Hints

C11 Combination SW

19-12 : Continuity with the light control SW at AUTO position

Body ECU

5-Ground : Approx. 12 volts with the power SW at IG ON position
6-Ground : Always approx. 12 volts
1-Ground : Always continuity

: Parts Location

Code	See Page	Code	See Page	Code	See Page
A24	46	B7 C	46	J6	48
B5 A	46	C11	47		
B6 B	46	D1	47		

: Relay Blocks

Code	See Page	Relay Blocks (Relay Block Location)
3	22	Engine Room R/B (Engine Compartment Left)

: Junction Block and Wire Harness Connector

Code	See Page	Junction Block and Wire Harness (Connector Location)
1A	28	Engine Room Main Wire and Driver Side J/B (Lower Finish Panel)
1B		
1E	28	Instrument Panel Wire and Driver Side J/B (Lower Finish Panel)
1L	29	
3B	23	Engine Room Main Wire and Engine Room J/B (Engine Compartment Left)
3D		
4B	36	Instrument Panel Wire and Center Connector No.1 (Behind the Combination Meter)
4F		
4G		
4I		
5H	40	Instrument Panel Wire and Center Connector No.2 (Instrument Panel Brace RH)
5M		

: Connector Joining Wire Harness and Wire Harness

Code	See Page	Joining Wire Harness and Wire Harness (Connector Location)
IG2	58	Instrument Panel Wire and Instrument Panel No.2 Wire (Behind the Combination Meter)
IJ3	58	Engine Room Main Wire and Instrument Panel Wire (Behind the Glove Box)

: Ground Points

Code	See Page	Ground Points Location
IH	56	Cowl Side Panel LH

Light Auto Turn Off System

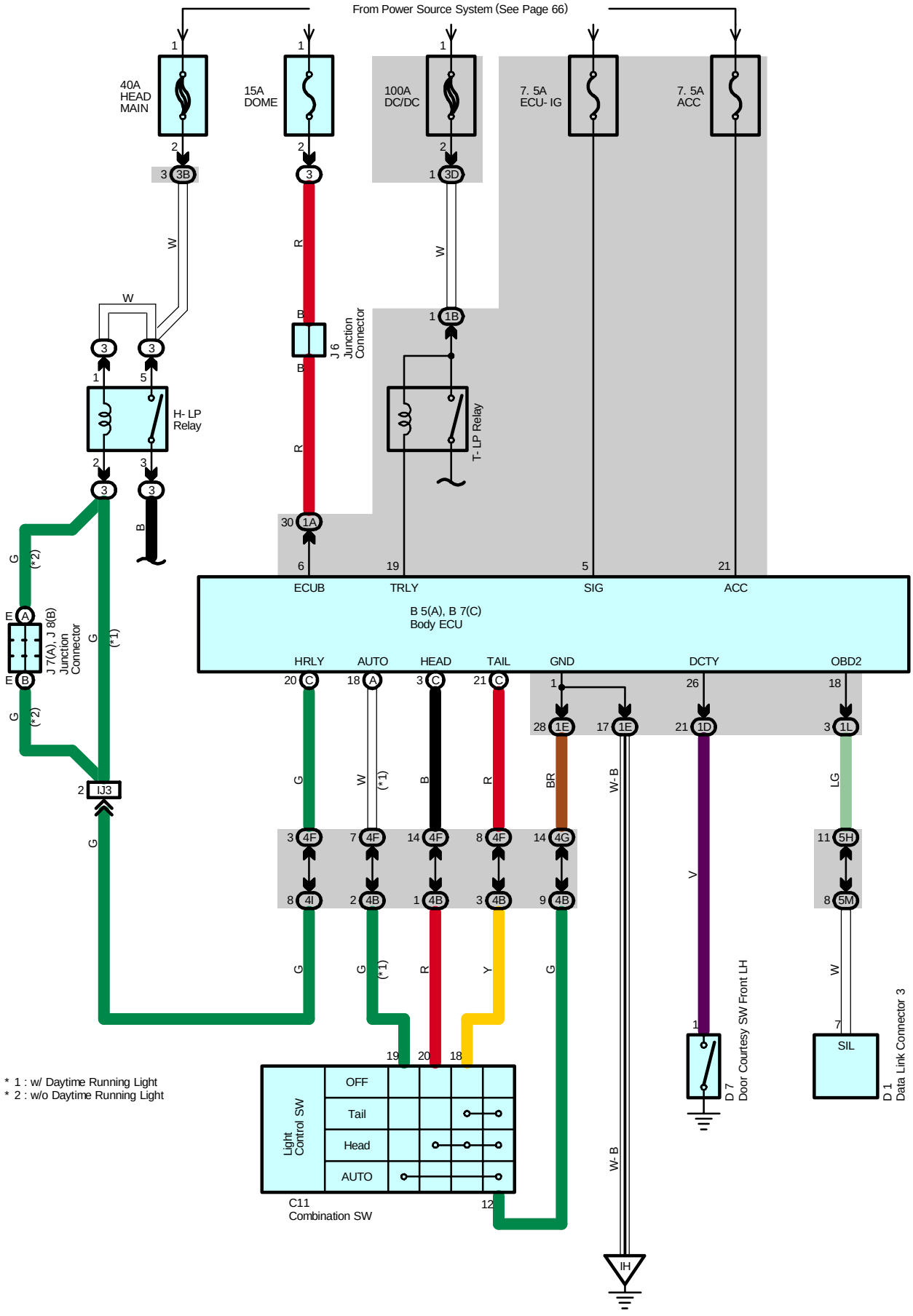

System Outline

"The light auto turn off system" automatically turns off the taillights or headlights when the driver's side door is opened, which prevents the lights from being left on.
If the power SW is pushed to OFF from IG ON with the headlights or taillights on, signal is input to the TERMINAL SIG of the body ECU. If the driver's side door is opened at that time, the signal from the door courtesy SW front LH is sent to the TERMINAL DCTY of the body ECU. The signal turns off the headlights, front fog lights or taillights.

Service Hints

Body ECU

6-Ground : Always approx. 12 volts
5-Ground : Approx. 12 volts with the power SW at IG ON position
1-Ground : Always continuity

: Parts Location

Code		See Page	Code	See Page	Code		See Page
B5	A	46	D1	47	J7	A	48
B7	C	46	D7	50	J8	B	48
C11		47	J6	48			

: Relay Blocks

Code	See Page	Relay Blocks (Relay Block Location)
3	22	Engine Room R/B (Engine Compartment Left)

: Junction Block and Wire Harness Connector

Code	See Page	Junction Block and Wire Harness (Connector Location)
1A	28	Engine Room Main Wire and Driver Side J/B (Lower Finish Panel)
1B		
1D	28	Floor Wire and Driver Side J/B (Lower Finish Panel)
1E	28	Instrument Panel Wire and Driver Side J/B (Lower Finish Panel)
1L	29	
3B	23	Engine Room Main Wire and Engine Room J/B (Engine Compartment Left)
3D		
4B	36	Instrument Panel Wire and Center Connector No.1 (Behind the Combination Meter)
4F		
4G		
4I		
5H	40	Instrument Panel Wire and Center Connector No.2 (Instrument Panel Brace RH)
5M		

: Connector Joining Wire Harness and Wire Harness

Code	See Page	Joining Wire Harness and Wire Harness (Connector Location)
IJ3	58	Engine Room Main Wire and Instrument Panel Wire (Behind the Glove Box)

: Ground Points

Code	See Page	Ground Points Location
IH	56	Cowl Side Panel LH

Front Fog Light

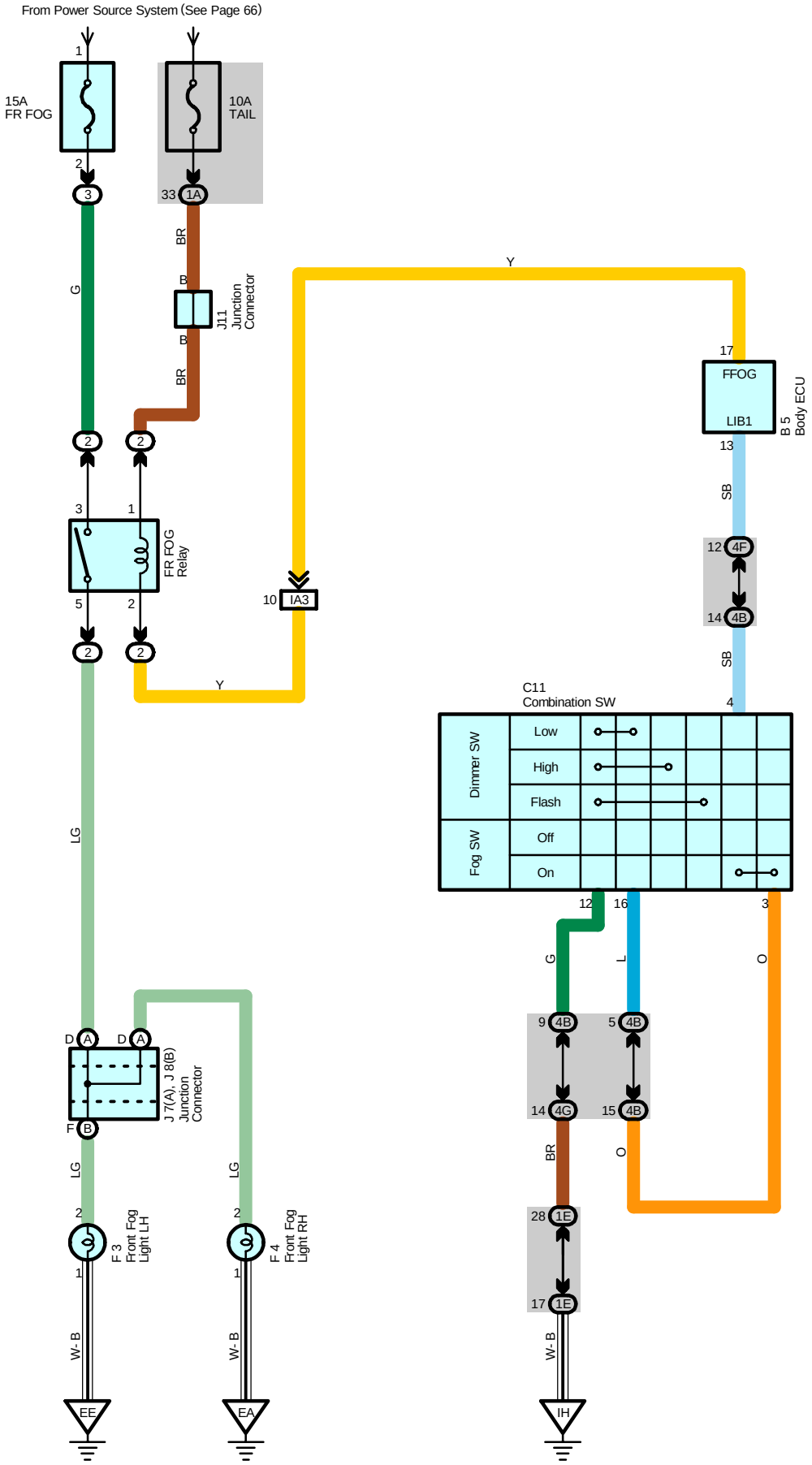

Service Hints

FR FOG Relay

3-5 : Closed with the light control SW at TAIL position, dimmer SW at LOW position and fog light SW at ON position

: Parts Location

Code	See Page	Code		See Page	Code	See Page
B5	46	F4		44	J11	48
C11	47	J7	A	48		
F3	44	J8	B	48		

: Relay Blocks

Code	See Page	Relay Blocks (Relay Block Location)
2	27	Engine Room R/B No.2 (Right Side of Reserve Tank)
3	22	Engine Room R/B (Engine Compartment Left)

: Junction Block and Wire Harness Connector

Code	See Page	Junction Block and Wire Harness (Connector Location)
1A	28	Engine Room Main Wire and Driver Side J/B (Lower Finish Panel)
1E	28	Instrument Panel Wire and Driver Side J/B (Lower Finish Panel)
4B	36	Instrument Panel Wire and Center Connector No.1 (Behind the Combination Meter)
4F		
4G		

: Connector Joining Wire Harness and Wire Harness

Code	See Page	Joining Wire Harness and Wire Harness (Connector Location)
IA3	56	Engine Room Main Wire and Instrument Panel Wire (Upper Parts of Front Body Pillar LH)

: Ground Points

Code	See Page	Ground Points Location
EA	54	Right Side of the Fender Apron
EE	54	Left Side of the Suspension Tower
IH	56	Cowl Side Panel LH

I GROUND POINT

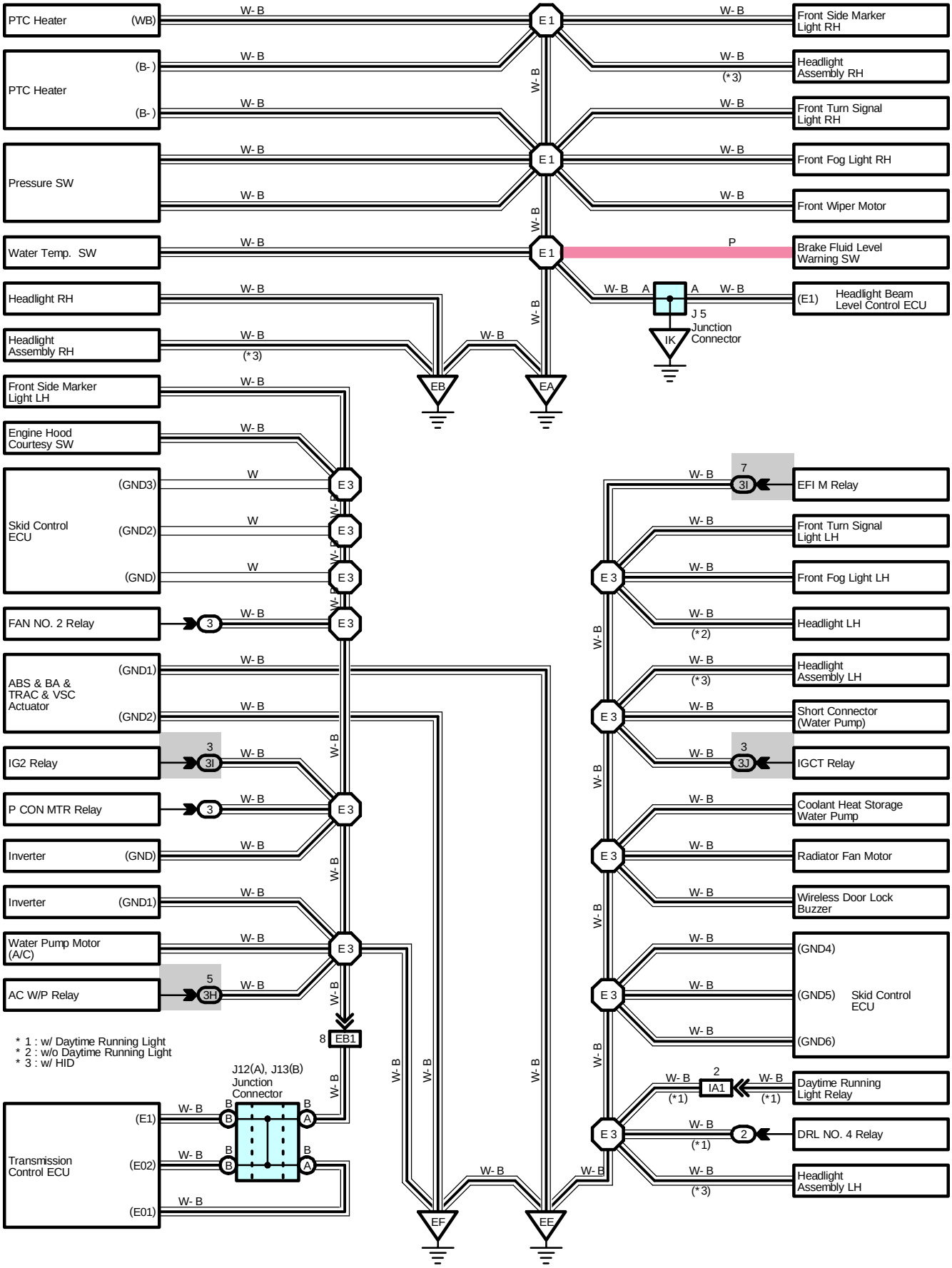

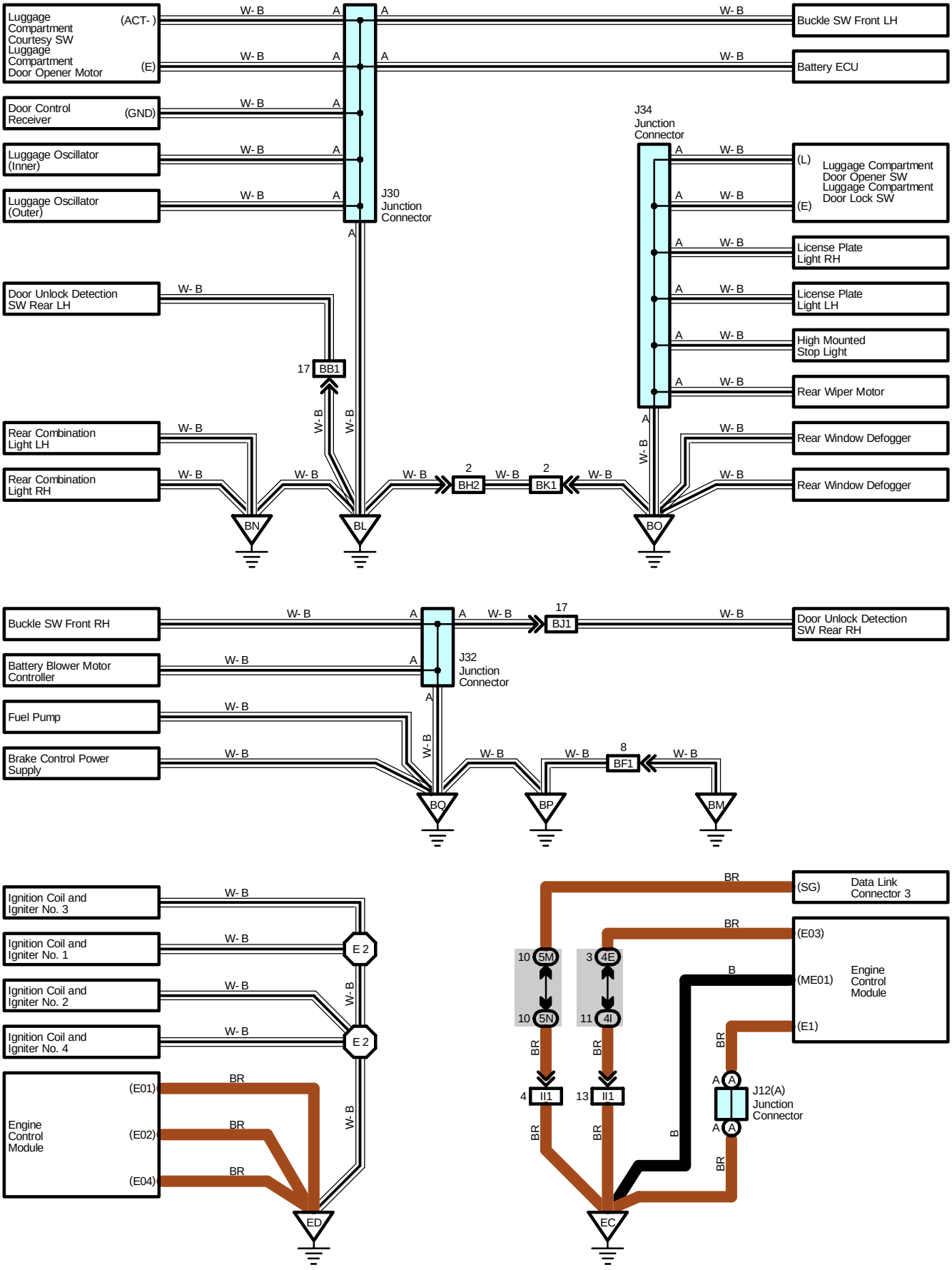
Luggage Compartment Courtesy SW
Luggage Compartment Door Opener Motor
(ACT-)
(E)
Door Control Receiver
(GND)
Luggage Oscillator (Inner)
Luggage Oscillator (Outer)
W- B
A
J30 Junction Connector
Buckle SW Front LH
Battery ECU
J34 Junction Connector
(L)
(E)
Luggage Compartment Door Opener SW
Luggage Compartment Door Lock SW
License Plate Light RH
License Plate Light LH
High Mounted Stop Light
Rear Wiper Motor
Rear Window Defogger
Door Unlock Detection SW Rear LH
17 BB1
Rear Combination Light LH
Rear Combination Light RH
2 BH2
2 BK1
BN
BL
BO
Buckle SW Front RH
17 BJ1
Door Unlock Detection SW Rear RH
Battery Blower Motor Controller
J32 Junction Connector
Fuel Pump
Brake Control Power Supply
8 BF1
BQ
BP
BM
Ignition Coil and Igniter No. 3
Ignition Coil and Igniter No. 1
Ignition Coil and Igniter No. 2
Ignition Coil and Igniter No. 4
E 2
Engine Control Module
(E01)
(E02)
(E04)
BR
ED
(SG)
Data Link Connector 3
(E03)
(ME01)
(E1)
Engine Control Module
10 5M
10 5N
3 4E
11 4I
4 I11
13 I11
J12(A) Junction Connector
EC

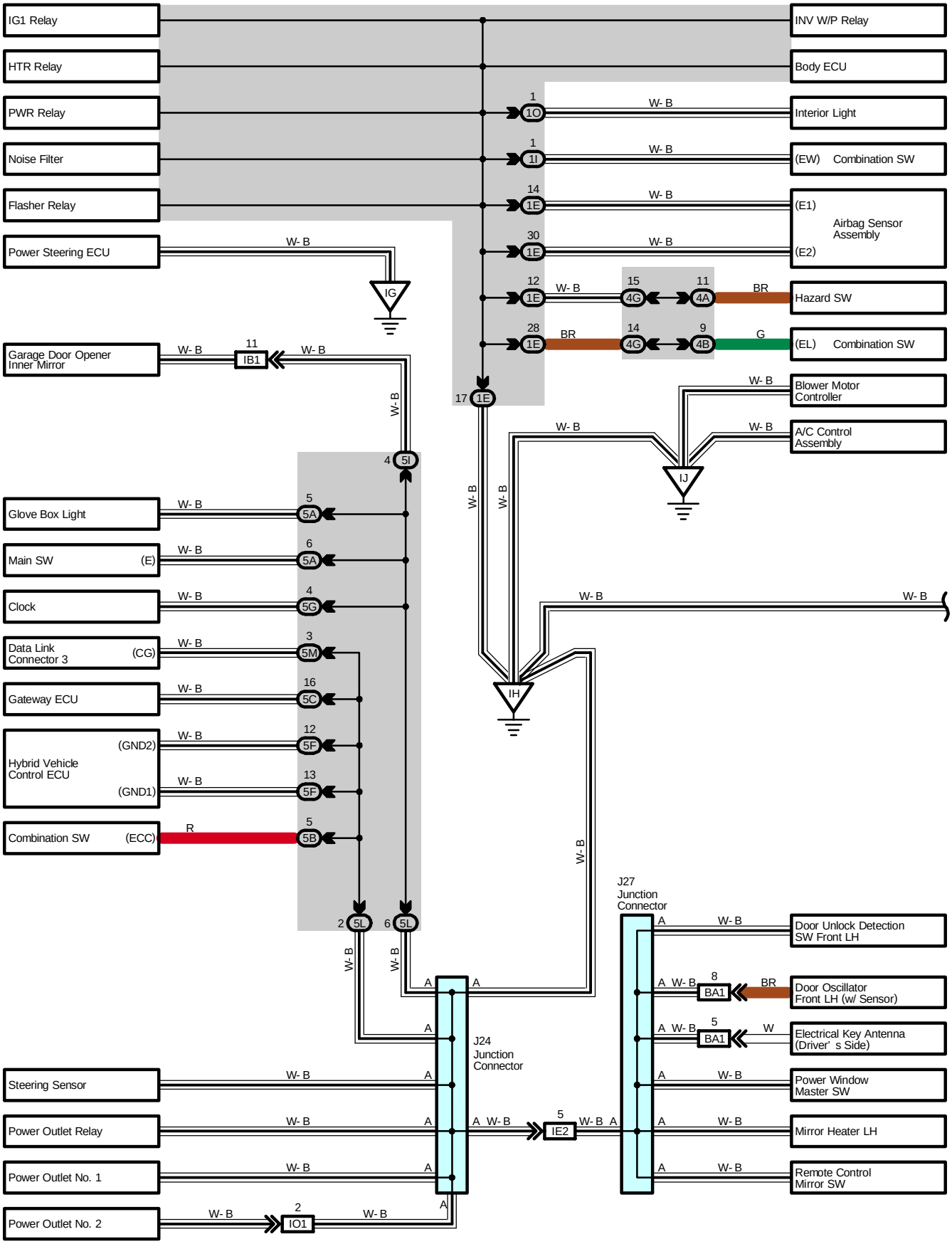
IG1 Relay
HTR Relay
PWR Relay
Noise Filter
Flasher Relay
Power Steering ECU
Garage Door Opener Inner Mirror
Glove Box Light
Main SW (E)
Clock
Data Link Connector 3 (CG)
Gateway ECU
Hybrid Vehicle Control ECU (GND2)
Hybrid Vehicle Control ECU (GND1)
Combination SW (ECC)
Steering Sensor
Power Outlet Relay
Power Outlet No. 1
Power Outlet No. 2
INV W/P Relay
Body ECU
Interior Light
(EW) Combination SW
(E1) Airbag Sensor Assembly (E2)
Hazard SW
(EL) Combination SW
Blower Motor Controller
A/C Control Assembly
IG
IJ
IH
IB1
IO1
IE2
1O
1I
1E
4G
4A
4B
5I
5A
5G
5M
5C
5F
5B
5L
BA1
J24 Junction Connector
J27 Junction Connector
Door Unlock Detection SW Front LH
Door Oscillator Front LH (w/ Sensor)
Electrical Key Antenna (Driver' s Side)
Power Window Master SW
Mirror Heater LH
Remote Control Mirror SW
W- B
BR
R
G
W

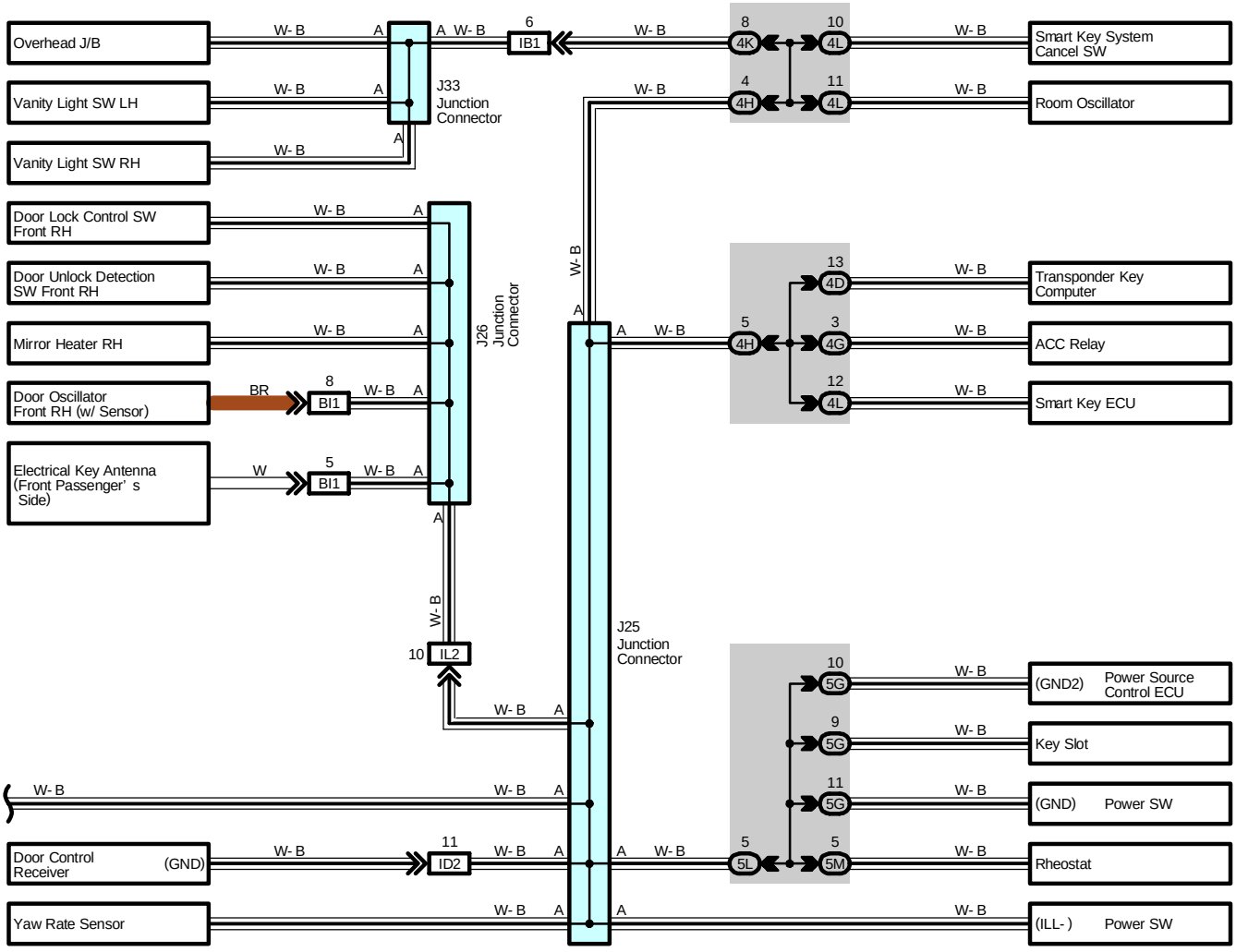
Overhead J/B
Vanity Light SW LH
Vanity Light SW RH
Door Lock Control SW Front RH
Door Unlock Detection SW Front RH
Mirror Heater RH
Door Oscillator Front RH (w/ Sensor)
Electrical Key Antenna (Front Passenger' s Side)
Door Control Receiver
(GND)
Yaw Rate Sensor
W- B
BR
W
J33 Junction Connector
J26 Junction Connector
J25 Junction Connector
IB1
BI1
IL2
ID2
4K
4L
4H
4D
4G
5G
5L
5M
Smart Key System Cancel SW
Room Oscillator
Transponder Key Computer
ACC Relay
Smart Key ECU
(GND2) Power Source Control ECU
Key Slot
(GND) Power SW
Rheostat
(ILL-) Power SW

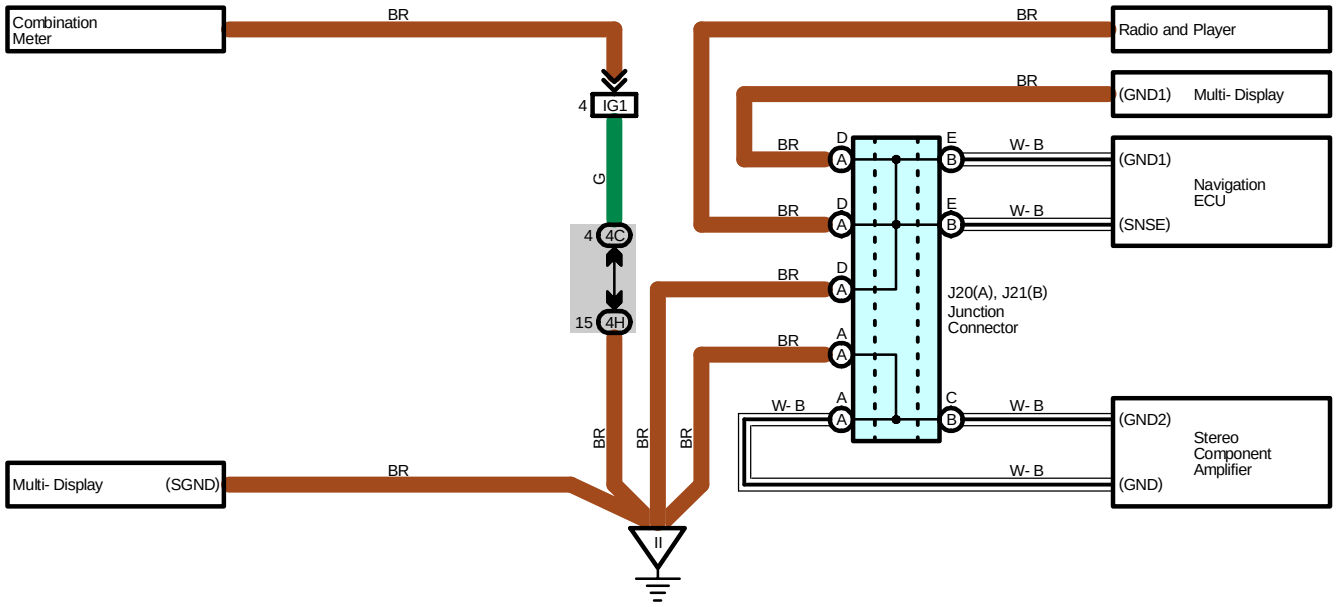
Combination Meter
Multi- Display
(SGND)
IG1
4C
4H
G
BR
J20(A), J21(B) Junction Connector
Radio and Player
(GND1) Multi- Display
(GND1) Navigation ECU
(SNSE)
(GND2) Stereo Component Amplifier
(GND)
W- B

I GROUND POINT

○ : Parts Location

Code		See Page	Code	See Page	Code	See Page
J5		48	J24	48	J32	51
J12	A	48	J25	48	J33	51
J13	B	48	J26	51	J34	51
J20	A	48	J27	51		
J21	B	48	J30	51		

▭ : Relay Blocks

Code	See Page	Relay Blocks (Relay Block Location)
2	27	Engine Room R/B No.2 (Right Side of Reserve Tank)
3	22	Engine Room R/B (Engine Compartment Left)

▭ : Junction Block and Wire Harness Connector

Code	See Page	Junction Block and Wire Harness (Connector Location)
1E	28	Instrument Panel Wire and Driver Side J/B (Lower Finish Panel)
1I		
1O	28	Roof Wire and Driver Side J/B (Lower Finish Panel)
3H	24	Engine Room Main Wire and Engine Room J/B (Engine Compartment Left)
3I		
3J		
4A	36	Instrument Panel Wire and Center Connector No.1 (Behind the Combination Meter)
4B		
4C		
4D		
4E		
4G		
4H		
4I		
4K		
4L		
5A	40	Instrument Panel Wire and Center Connector No.2 (Instrument Panel Brace RH)
5B		
5C		
5F		
5G		
5I		
5L		
5M		
5N		

: Connector Joining Wire Harness and Wire Harness

Code	See Page	Joining Wire Harness and Wire Harness (Connector Location)
EB1	54	Engine Wire and Engine Room Main Wire (Inside of the Engine Room R/B)
IA1	56	Engine Room Main Wire and Instrument Panel Wire (Upper Parts of Front Body Pillar LH)
IB1	56	Roof Wire and Instrument Panel Wire (Upper Parts of Front Body Pillar LH)
ID2	56	Instrument Panel Wire and Floor Wire (Left Kick Panel)
IE2	56	Front Door LH Wire and Instrument Panel Wire (Left Kick Panel)
IG1	58	Instrument Panel Wire and Instrument Panel No.2 Wire (Behind the Combination Meter)
II1	58	Engine Wire and Instrument Panel Wire (Behind the Glove Box)
IL2	58	Front Door RH Wire and Instrument Panel Wire (Right Kick Panel)
IO1	58	Instrument Panel Wire and Instrument Panel No.4 Wire (Front Console Box LH)
BA1	60	Front Door LH Wire and Electrical Key LH Wire (Near the Front Door Outside Handle LH)
BB1	60	Rear Door No.2 Wire and Floor Wire (Left Center Pillar)
BF1	60	Floor No.2 Wire and Fuel Tank Wire (Near the Fuel Tank)
BH2	62	Back Door No.1 Wire and Floor Wire (Rear Side of Roof Panel)
BI1	62	Front Door RH Wire and Electrical Key RH Wire (Near the Front Door Outside Handle RH)
BJ1	62	Rear Door No.1 Wire and Floor No.2 Wire (Right Center Pillar)
BK1	62	Back Door No.1 Wire and Back Door No.2 Wire (Rear Side of Roof Panel)

: Ground Points

Code	See Page	Ground Points Location
EA	54	Right Side of the Fender Apron
EB		
EC	54	Engine Block
ED		
EE	54	Left Side of the Suspension Tower
EF		
IG	56	Cowl Side Panel LH
IH		
II	56	Instrument Panel Brace LH
IJ	56	Instrument Panel Brace RH
IK	56	Cowl Side Panel RH
BL	60	Rear Side of Left Quarter Panel
BM	60	Near the Fuel Tank
BN	60	Lower Back Panel Center
BO	60	Center of the Back Door Panel
BP	60	Front Side of Right Quarter Panel
BQ	60	Rear Side of Right Quarter Panel

: Splice Points

Code	See Page	Wire Harness with Splice Points	Code	See Page	Wire Harness with Splice Points
E1	54	Engine Room Main Wire	E3	54	Engine Room Main Wire
E2	54	Engine Wire			

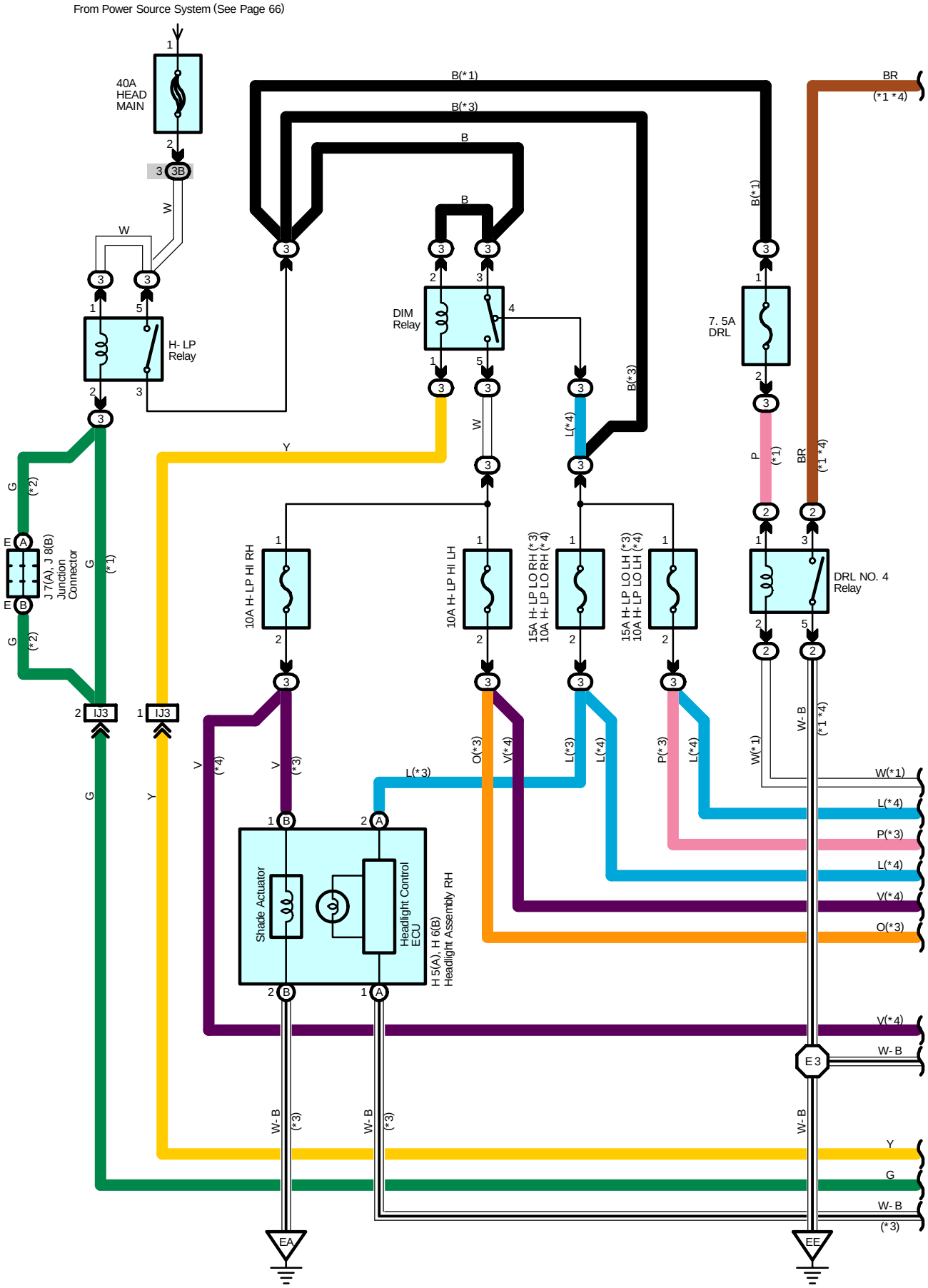
From Power Source System (See Page 66)
40A HEAD MAIN
3B
H- LP Relay
DIM Relay
7. 5A DRL
DRL NO. 4 Relay
10A H- LP HI RH
10A H- LP HI LH
15A H- LP LO RH (*3)
10A H- LP LO RH (*4)
15A H- LP LO LH (*3)
10A H- LP LO LH (*4)
J 7(A), J 8(B) Junction Connector
IJ3
Shade Actuator
Headlight Control ECU
H 5(A), H 6(B) Headlight Assembly RH
E 3
EA
EE
B(*1)
B(*3)
B
BR (*1 *4)
W
Y
G
P (*1)
L(*4)
O(*3)
V(*4)
P(*3)
L(*3)
W(*1)
W- B
W- B (*3)

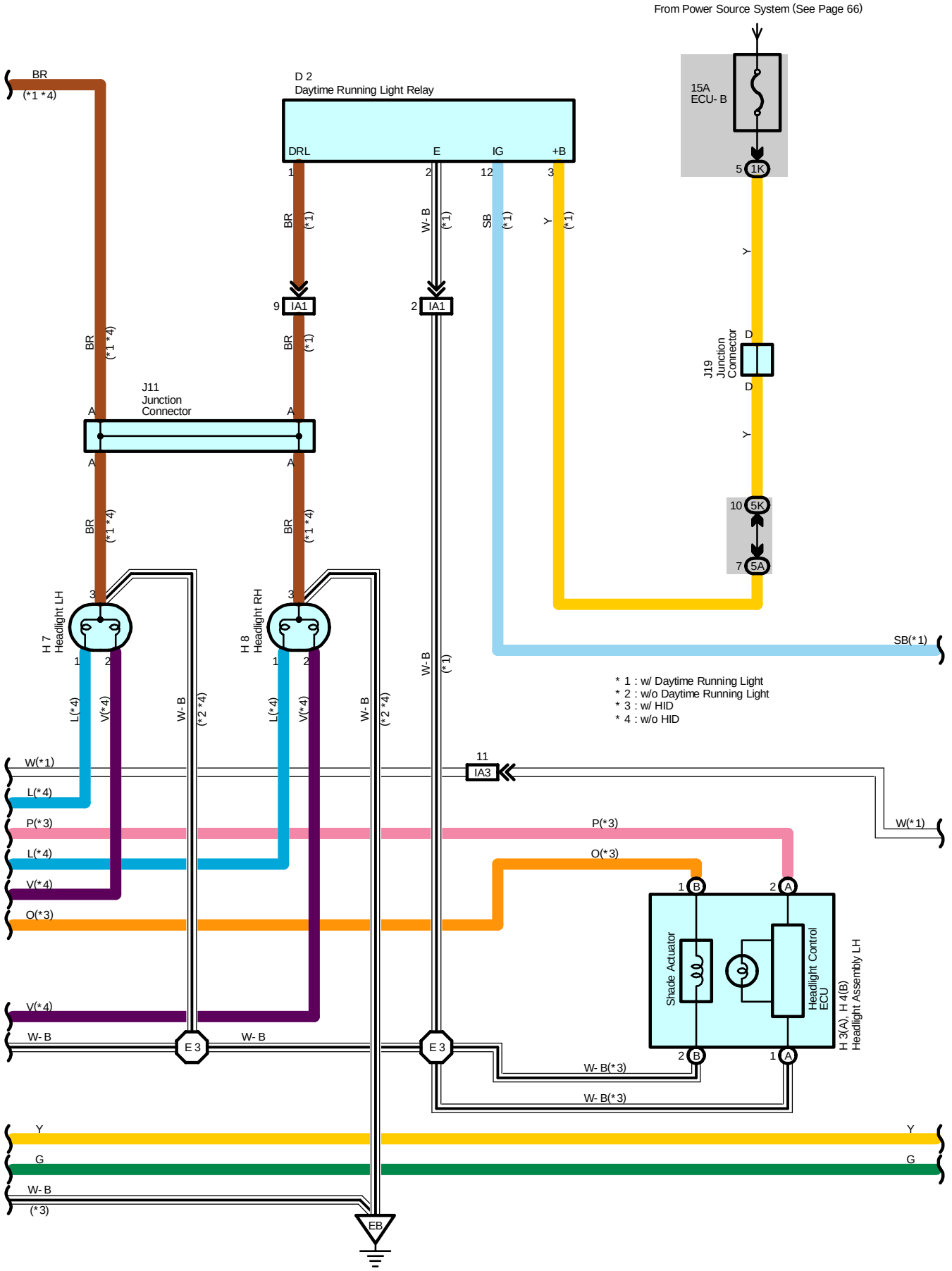
From Power Source System (See Page 66)
15A
ECU- B
5
1K
D 2
Daytime Running Light Relay
DRL
E
IG
+B
1
2
12
3
BR
(*1 *4)
BR
(*1)
W- B
(*1)
SB
(*1)
Y
(*1)
9
IA1
2
IA1
Y
J19
Junction
Connector
D
D
Y
10
5K
7
5A
SB(*1)
J11
Junction
Connector
A
A
A
A
BR
(*1 *4)
BR
(*1)
BR
(*1 *4)
BR
(*1 *4)
H 7
Headlight LH
H 8
Headlight RH
3
3
1
2
1
2
L(*4)
V(*4)
W- B
(*2 *4)
L(*4)
V(*4)
W- B
(*2 *4)
W- B
(*1)
* 1 : w/ Daytime Running Light
* 2 : w/o Daytime Running Light
* 3 : w/ HID
* 4 : w/o HID
11
IA3
W(*1)
L(*4)
P(*3)
L(*4)
V(*4)
O(*3)
P(*3)
W(*1)
O(*3)
1
B
2
A
Shade Actuator
Headlight Control
ECU
H 3(A), H 4(B)
Headlight Assembly LH
2
B
1
A
V(*4)
W- B
E 3
W- B
E 3
W- B(*3)
W- B(*3)
Y
G
W- B
(*3)
Y
G
EB

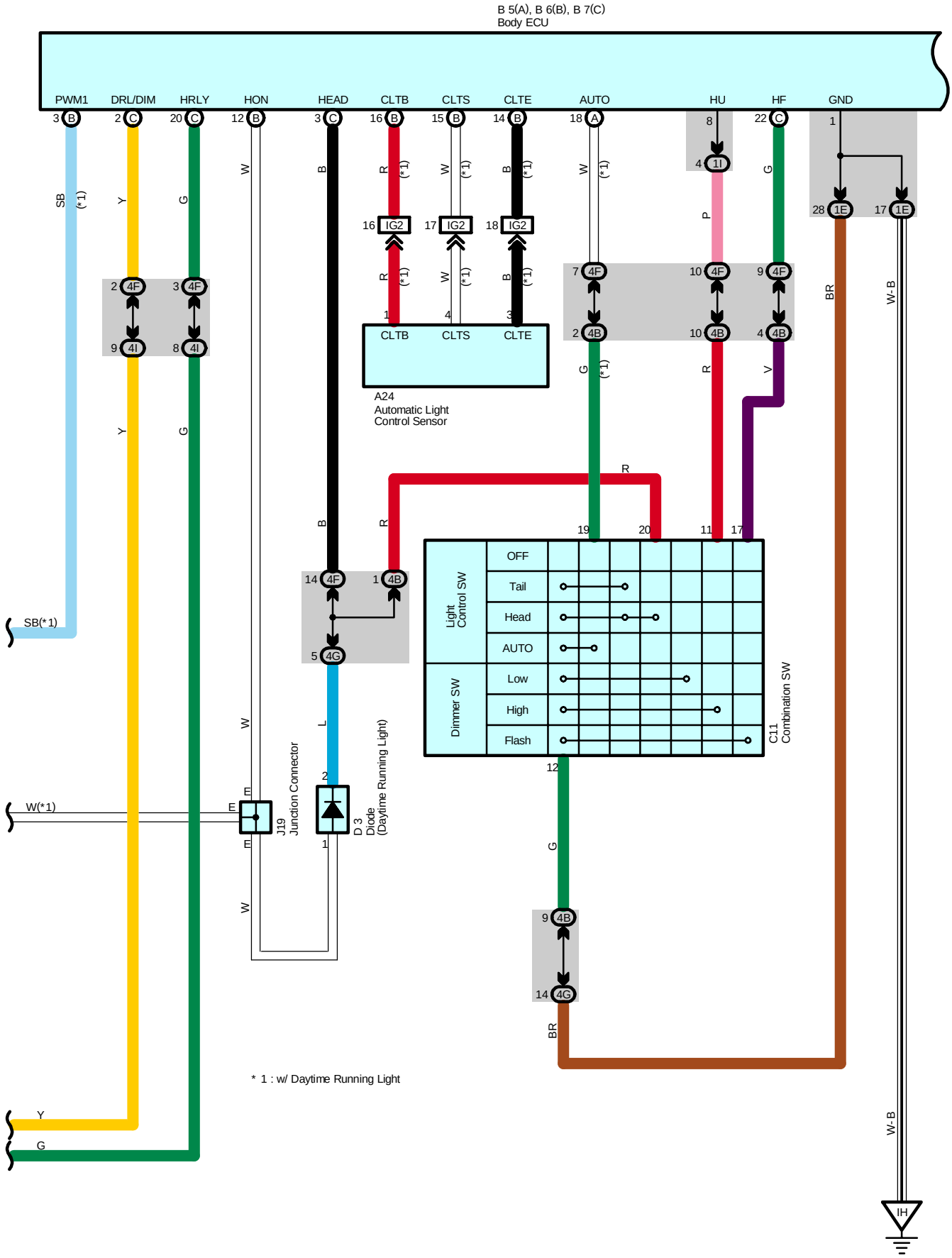
B 5(A), B 6(B), B 7(C)
Body ECU
PWM1
DRL/DIM
HRLY
HON
HEAD
CLTB
CLTS
CLTE
AUTO
HU
HF
GND
A24
Automatic Light
Control Sensor
Light
Control SW
Dimmer SW
OFF
Tail
Head
AUTO
Low
High
Flash
C11
Combination SW
J19
Junction Connector
D 3
Diode
(Daytime Running Light)
SB(*1)
W(*1)
Y
G
W-B
IH
* 1 : w/ Daytime Running Light

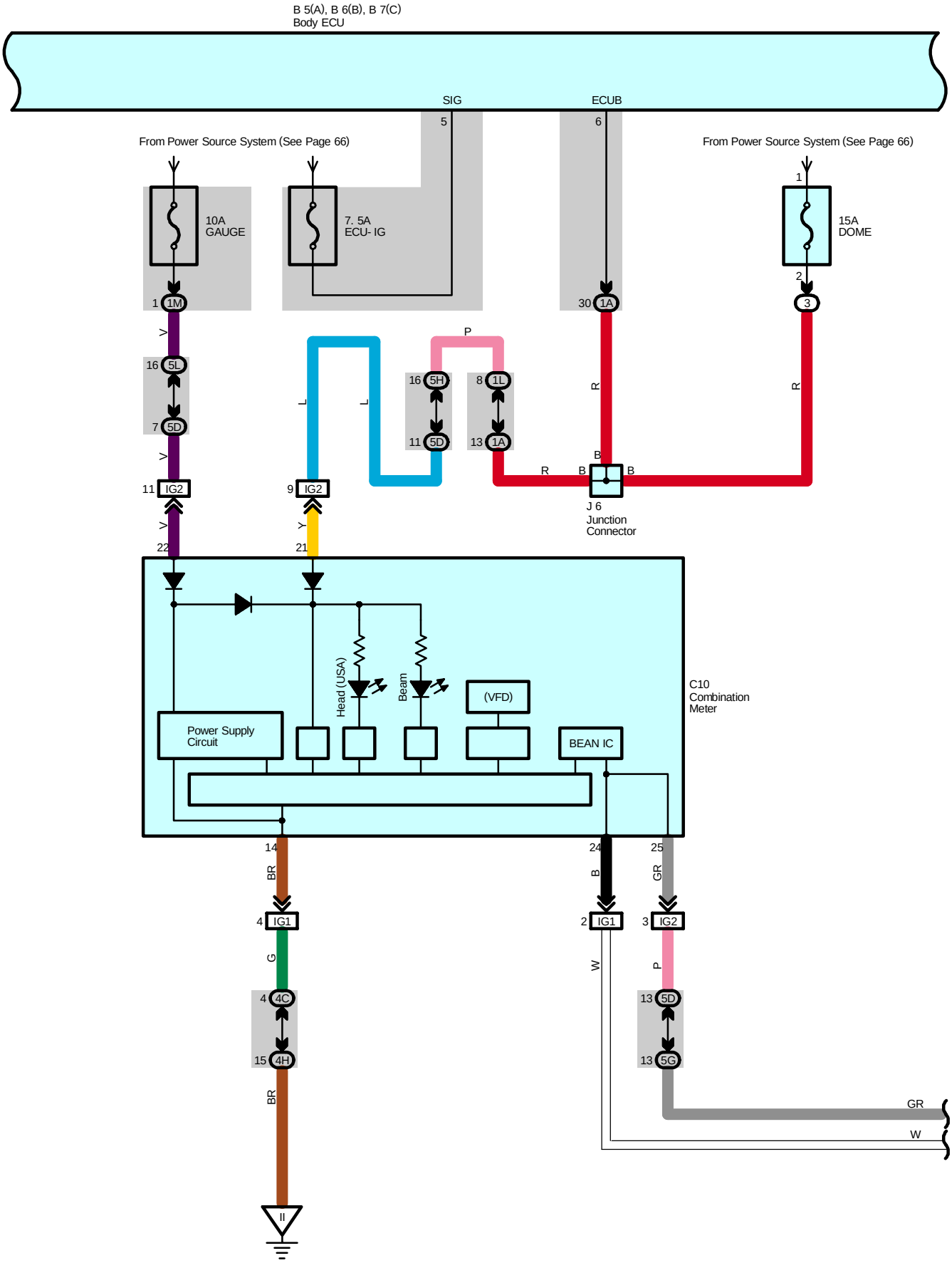
B 5(A), B 6(B), B 7(C)
Body ECU
SIG
5
ECUB
6
From Power Source System (See Page 66)
From Power Source System (See Page 66)
10A
GAUGE
7. 5A
ECU- IG
15A
DOME
1
1M
30
1A
2
3
16
5L
7
5D
16
5H
11
5D
8
1L
13
1A
11
IG2
9
IG2
22
21
J 6
Junction
Connector
Head (USA)
Beam
(VFD)
Power Supply
Circuit
BEAN IC
C10
Combination
Meter
14
4
IG1
4
4C
15
4H
24
2
IG1
25
3
IG2
13
5D
13
5G
GR
W
II

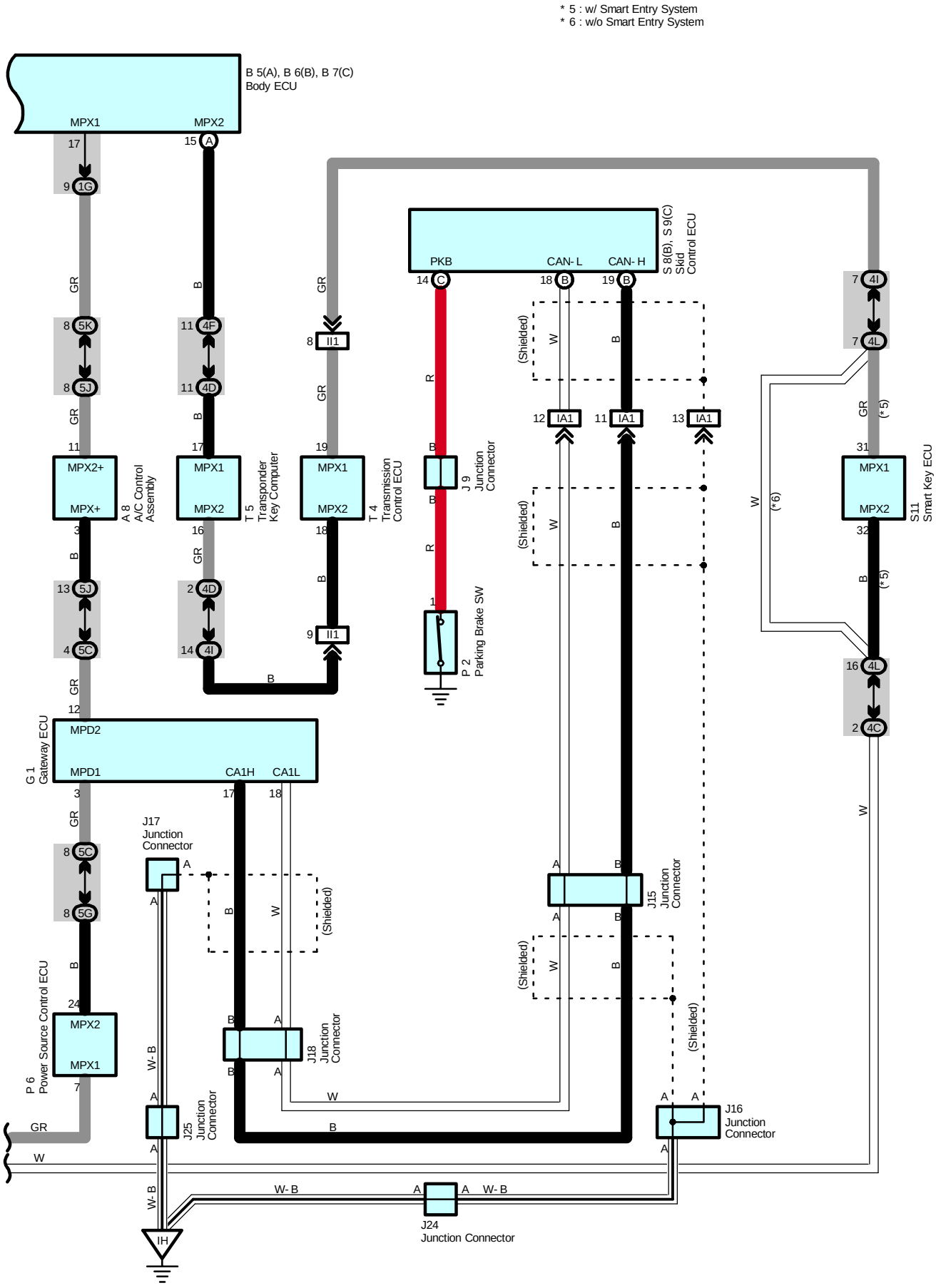
* 5 : w/ Smart Entry System
* 6 : w/o Smart Entry System
B 5(A), B 6(B), B 7(C)
Body ECU
MPX1
MPX2
S 8(B), S 9(C)
Skid
Control ECU
PKB
CAN- L
CAN- H
A 8
A/C Control
Assembly
MPX2+
MPX+
T 5
Transponder
Key Computer
T 4
Transmission
Control ECU
J 9
Junction
Connector
P 2
Parking Brake SW
S11
Smart Key ECU
G 1
Gateway ECU
MPD2
MPD1
CA1H
CA1L
P 6
Power Source Control ECU
J17
Junction
Connector
J18
Junction
Connector
J15
Junction
Connector
J16
Junction
Connector
J25
Junction
Connector
J24
Junction Connector
(Shielded)
(*5)
(*6)
IH

System Outline

Daytime Running Light Function

When power SW is at IG ON position and the vehicle is ready to drive (READY lamp on the display in combination meter is on), releasing parking brake makes signal go into TERMINAL PKB of body ECU. In this condition, when light control SW is at Off/Tail/AUTO position (Headlight is not lit), body ECU sends daytime operation request from TERMINAL DRL/DIM to daytime running light relay. As a result, daytime running light relay duty-operates headlights (Dimmer than regular lighting)

Service Hints

C11 Combination SW

20-12 : Continuity with the light control SW at HEAD position
17-12 : Continuity with the dimmer SW at FLASH position
11-12 : Continuity with the dimmer SW at HIGH position

○ : Parts Location

Code	See Page	Code	See Page	Code	See Page
A8	46	H5 A	44	J18	48
A24	46	H6 B	44	J19	48
B5 A	46	H7	44	J24	48
B6 B	46	H8	44	J25	48
B7 C	46	J6	48	P2	49
C10	47	J7 A	48	P6	49
C11	47	J8 B	48	S8 B	49
D2	47	J9	48	S9 C	49
D3	47	J11	48	S11	49
G1	47	J15	48	T4	49
H3 A	44	J16	48	T5	49
H4 B	44	J17	48		

▭ : Relay Blocks

Code	See Page	Relay Blocks (Relay Block Location)
2	27	Engine Room R/B No.2 (Right Side of Reserve Tank)
3	22	Engine Room R/B (Engine Compartment Left)

: **Junction Block and Wire Harness Connector**

Code	See Page	Junction Block and Wire Harness (Connector Location)
1A	28	Engine Room Main Wire and Driver Side J/B (Lower Finish Panel)
1E	28	Instrument Panel Wire and Driver Side J/B (Lower Finish Panel)
1G		
1I		
1K		
1L	29	
1M		
3B	23	Engine Room Main Wire and Engine Room J/B (Engine Compartment Left)
4B	36	Instrument Panel Wire and Center Connector No.1 (Behind the Combination Meter)
4C		
4D		
4F		
4G		
4H		
4I		
4L		
5A	40	Instrument Panel Wire and Center Connector No.2 (Instrument Panel Brace RH)
5C		
5D		
5G		
5H		
5J		
5K		
5L		

: **Connector Joining Wire Harness and Wire Harness**

Code	See Page	Joining Wire Harness and Wire Harness (Connector Location)
IA1	56	Engine Room Main Wire and Instrument Panel Wire (Upper Parts of Front Body Pillar LH)
IA3		
IG1	58	Instrument Panel Wire and Instrument Panel No.2 Wire (Behind the Combination Meter)
IG2		
II1	58	Engine Wire and Instrument Panel Wire (Behind the Glove Box)
IJ3	58	Engine Room Main Wire and Instrument Panel Wire (Behind the Glove Box)

: **Ground Points**

Code	See Page	Ground Points Location
EA	54	Right Side of the Fender Apron
EB		
EE	54	Left Side of the Suspension Tower
IH	56	Cowl Side Panel LH
II	56	Instrument Panel Brace LH

: **Splice Points**

Code	See Page	Wire Harness with Splice Points	Code	See Page	Wire Harness with Splice Points
E3	54	Engine Room Main Wire			

Headlight Beam Level Control

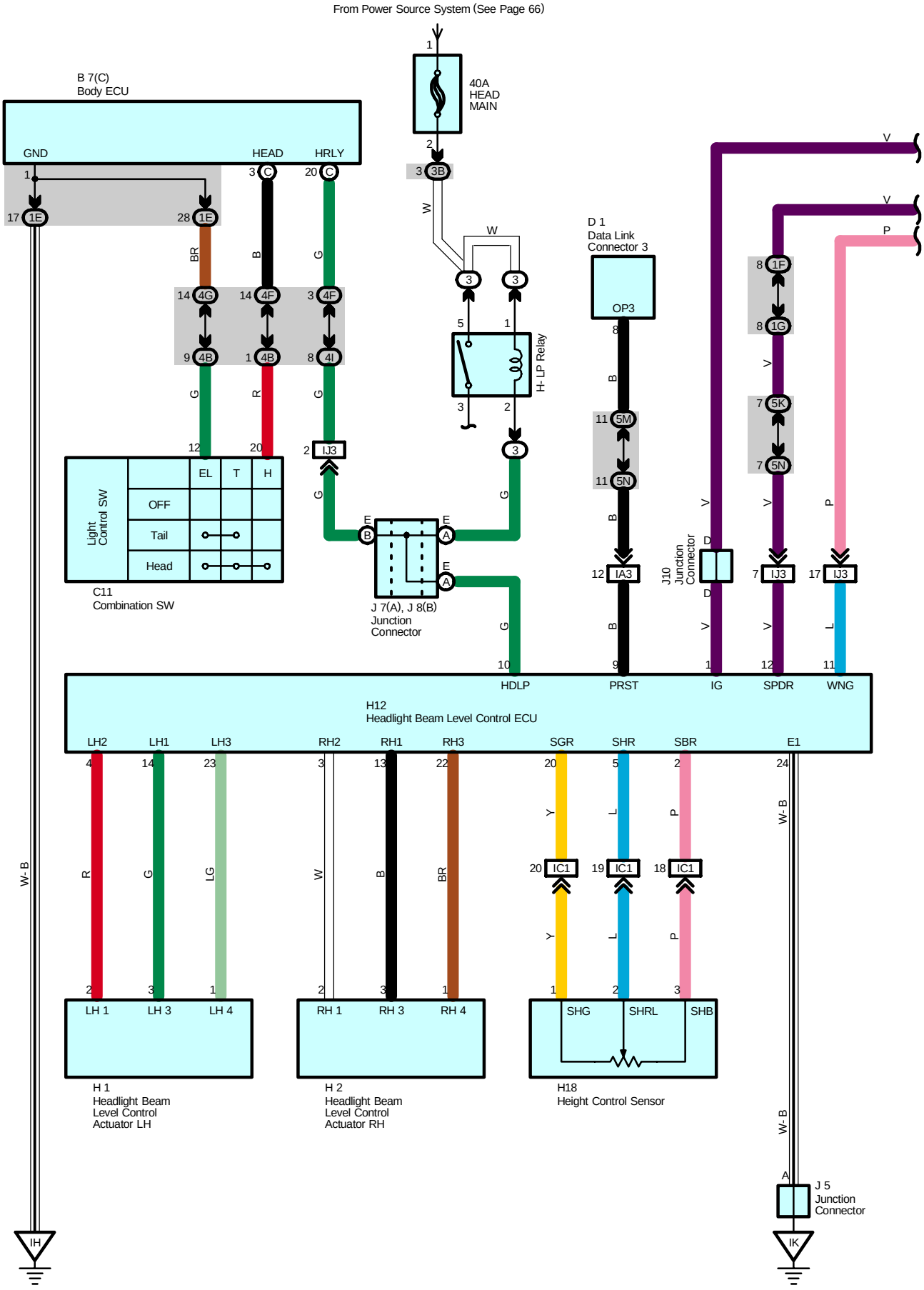

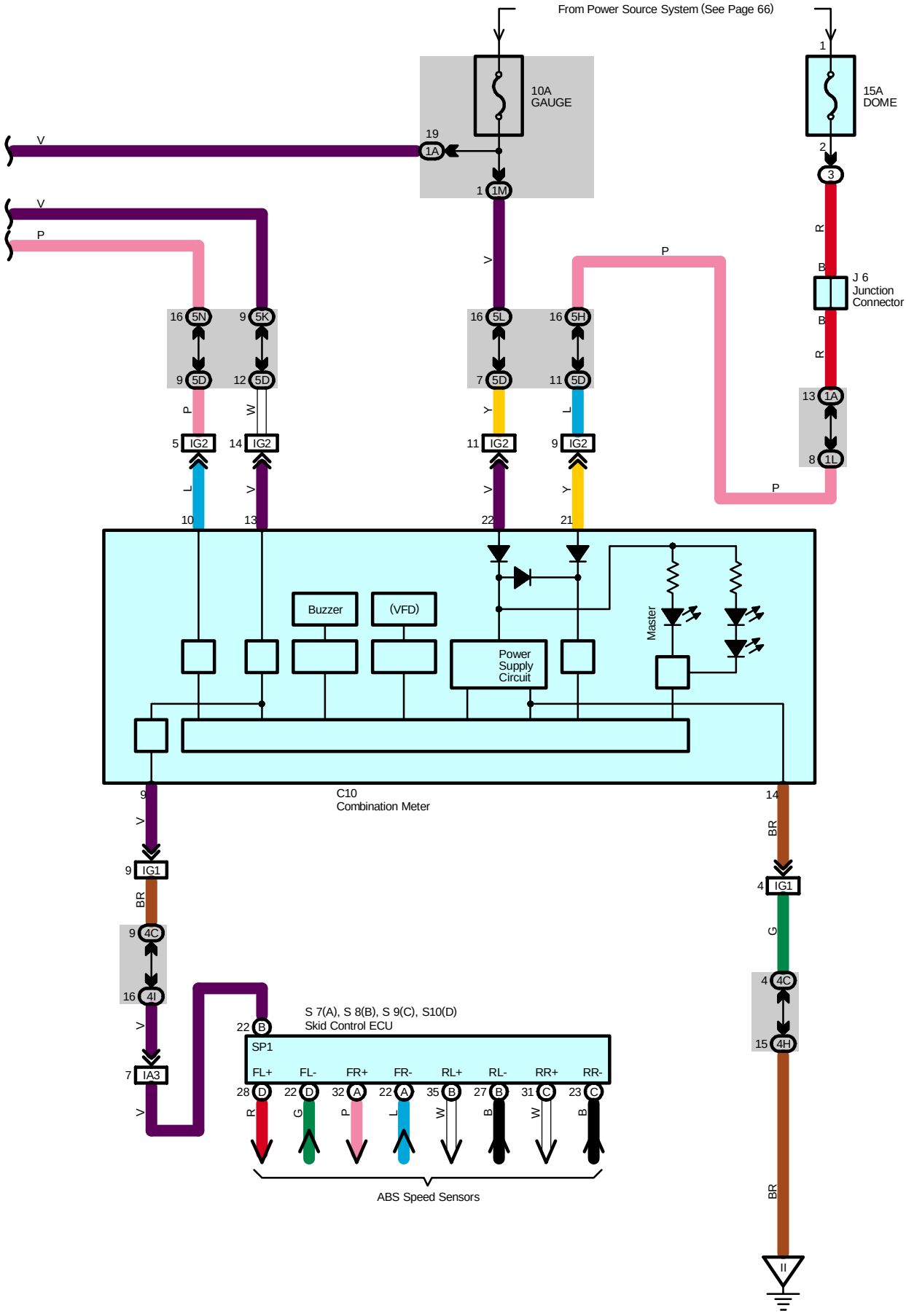
From Power Source System (See Page 66)
10A
GAUGE
15A
DOME
J 6
Junction
Connector
Buzzer
(VFD)
Power
Supply
Circuit
Master
C10
Combination Meter
S 7(A), S 8(B), S 9(C), S10(D)
Skid Control ECU
SP1
FL+
FL-
FR+
FR-
RL+
RL-
RR+
RR-
ABS Speed Sensors
IG1
IG2
IA3

Headlight Beam Level Control

System Outline

This system adjusts the illuminating angle from changes in the vehicle height and axle distance, based on the information of the vehicle height detected by the height sensors installed at the rear of the vehicle and on information of the vehicle speed and acceleration output from the VSC system which operates the reflector with the obtained illuminating angle through actuators in order to always keep the beam axis constant.
If an error occurs in this system, the headlight beam level control warning light in the combination meter lights up and warning buzzer goes on to warn the driver.

Service Hints

H12 Headlight Beam Level Control ECU

1-Ground : Approx. 12 volts with the power SW at IG ON position
24-Ground : Always continuity
10-Ground : Always Approx. 12 volts

C11 Combination SW

20-12 : Continuity with the light control SW at HEAD position

○ : Parts Location

Code	See Page	Code	See Page	Code	See Page
B7 C	46	H12	47	J10	48
C10	47	H18	51	S7 A	49
C11	47	J5	48	S8 B	49
D1	47	J6	48	S9 C	49
H1	44	J7 A	48	S10 D	49
H2	44	J8 B	48		

▭ : Relay Blocks

Code	See Page	Relay Blocks (Relay Block Location)
3	22	Engine Room R/B (Engine Compartment Left)

▭ : Junction Block and Wire Harness Connector

Code	See Page	Junction Block and Wire Harness (Connector Location)
1A	28	Engine Room Main Wire and Driver Side J/B (Lower Finish Panel)
1E	28	Instrument Panel Wire and Driver Side J/B (Lower Finish Panel)
1F		
1G		
1L	29	
1M		
3B	23	Engine Room Main Wire and Engine Room J/B (Engine Compartment Left)
4B	36	Instrument Panel Wire and Center Connector No.1 (Behind the Combination Meter)
4C		
4F		
4G		
4H		
4I		
5D	40	Instrument Panel Wire and Center Connector No.2 (Instrument Panel Brace RH)
5H		
5K		
5L		
5M		
5N		

: **Connector Joining Wire Harness and Wire Harness**

Code	See Page	Joining Wire Harness and Wire Harness (Connector Location)
IA3	56	Engine Room Main Wire and Instrument Panel Wire (Upper Parts of Front Body Pillar LH)
IC1	56	Engine Room Main Wire and Floor Wire (Cowl Side Panel LH)
IG1	58	Instrument Panel Wire and Instrument Panel No.2 Wire (Behind the Combination Meter)
IG2		
IJ3	58	Engine Room Main Wire and Instrument Panel Wire (Behind the Glove Box)

: **Ground Points**

Code	See Page	Ground Points Location
IH	56	Cowl Side Panel LH
II	56	Instrument Panel Brace LH
IK	56	Cowl Side Panel RH

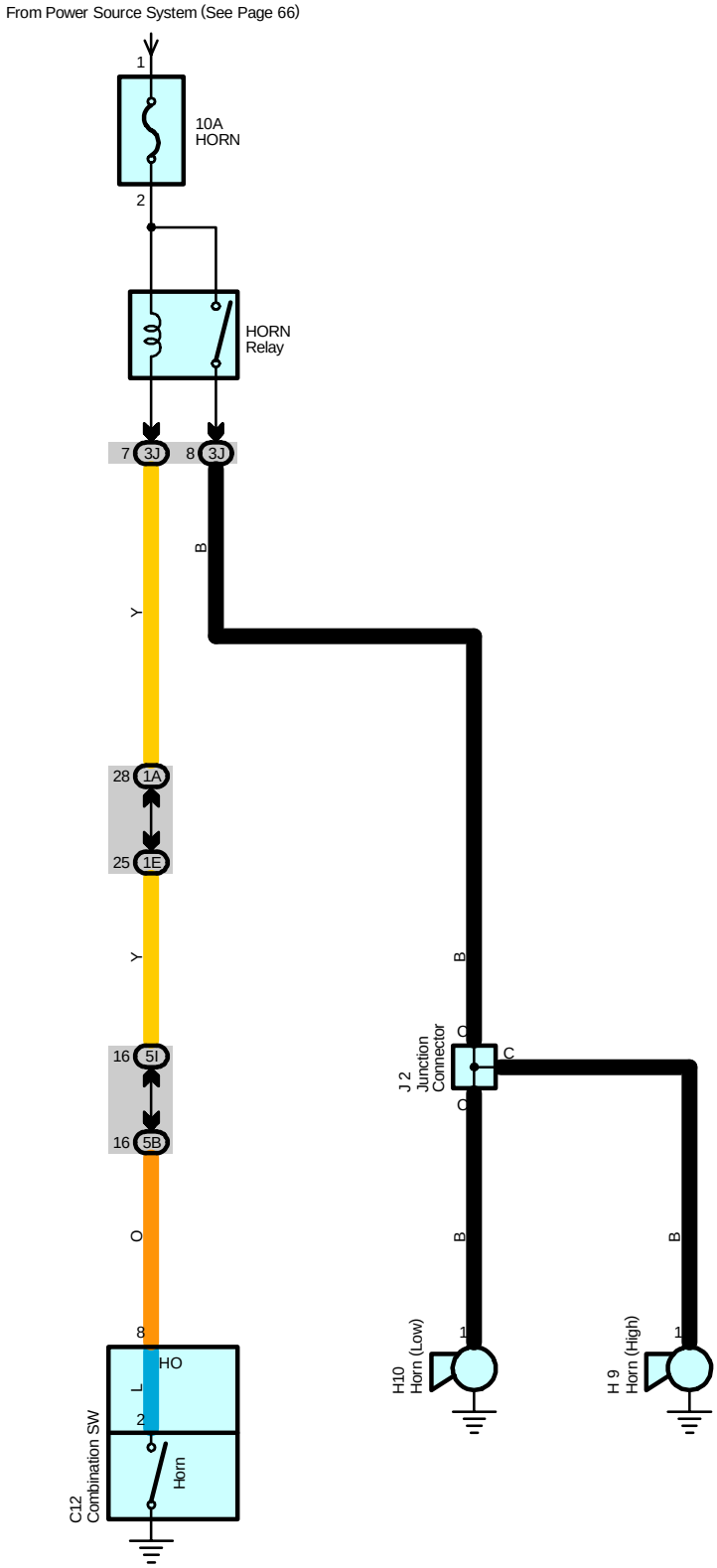
From Power Source System (See Page 66)
1
10A
HORN
2
HORN
Relay
7
3J
8
3J
B
Y
28
1A
25
1E
Y
16
5I
16
5B
O
8
HO
L
2
Horn
C12
Combination SW
B
C
J 2
Junction
Connector
C
B
B
1
H10
Horn (Low)
1
H 9
Horn (High)

Service Hints

H9, H10 Horn (Low), (High)

1-Ground : Approx. 12 volts with the horn SW on

○ : Parts Location

Code	See Page	Code	See Page	Code	See Page
C12	47	H10	44		
H9	44	J2	45		

⬭ : Junction Block and Wire Harness Connector

Code	See Page	Junction Block and Wire Harness (Connector Location)
1A	28	Engine Room Main Wire and Driver Side J/B (Lower Finish Panel)
1E	28	Instrument Panel Wire and Driver Side J/B (Lower Finish Panel)
3J	24	Engine Room Main Wire and Engine Room J/B (Engine Compartment Left)
5B	40	Instrument Panel Wire and Center Connector No.2 (Instrument Panel Brace RH)
5I		

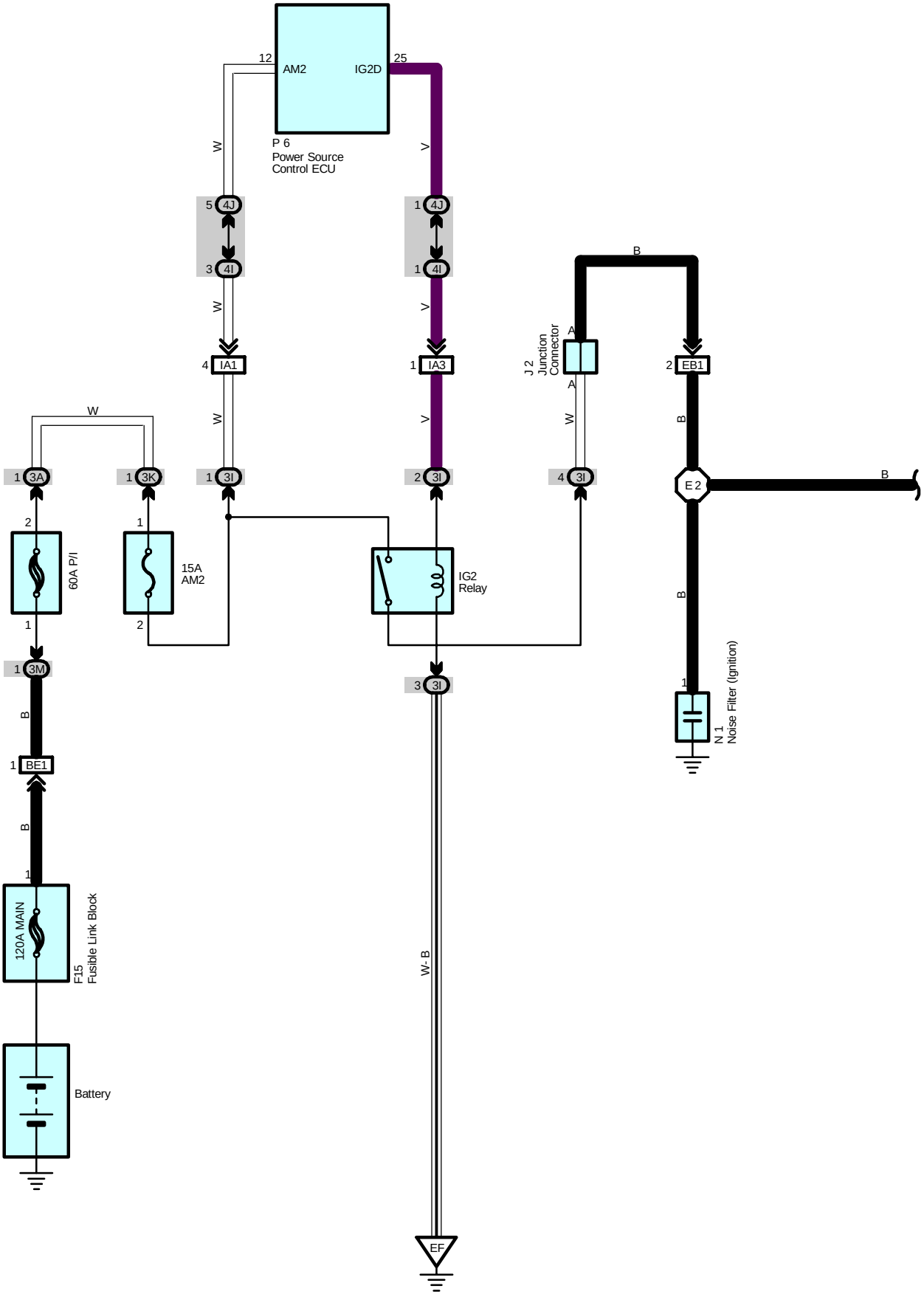
12
AM2
IG2D
25
P 6
Power Source
Control ECU
W
V
5 4J
3 4I
1 4J
1 4I
W
V
4 IA1
1 IA3
W
V
1 3A
1 3K
1 3I
2 3I
4 3I
W
2
1
60A P/I
15A
AM2
IG2
Relay
1 3M
B
1 BE1
B
1
120A MAIN
F15
Fusible Link Block
Battery
3 3I
W- B
EF
J 2
Junction
Connector
A
A
B
2 EB1
B
E 2
B
B
1
N 1
Noise Filter (Ignition)

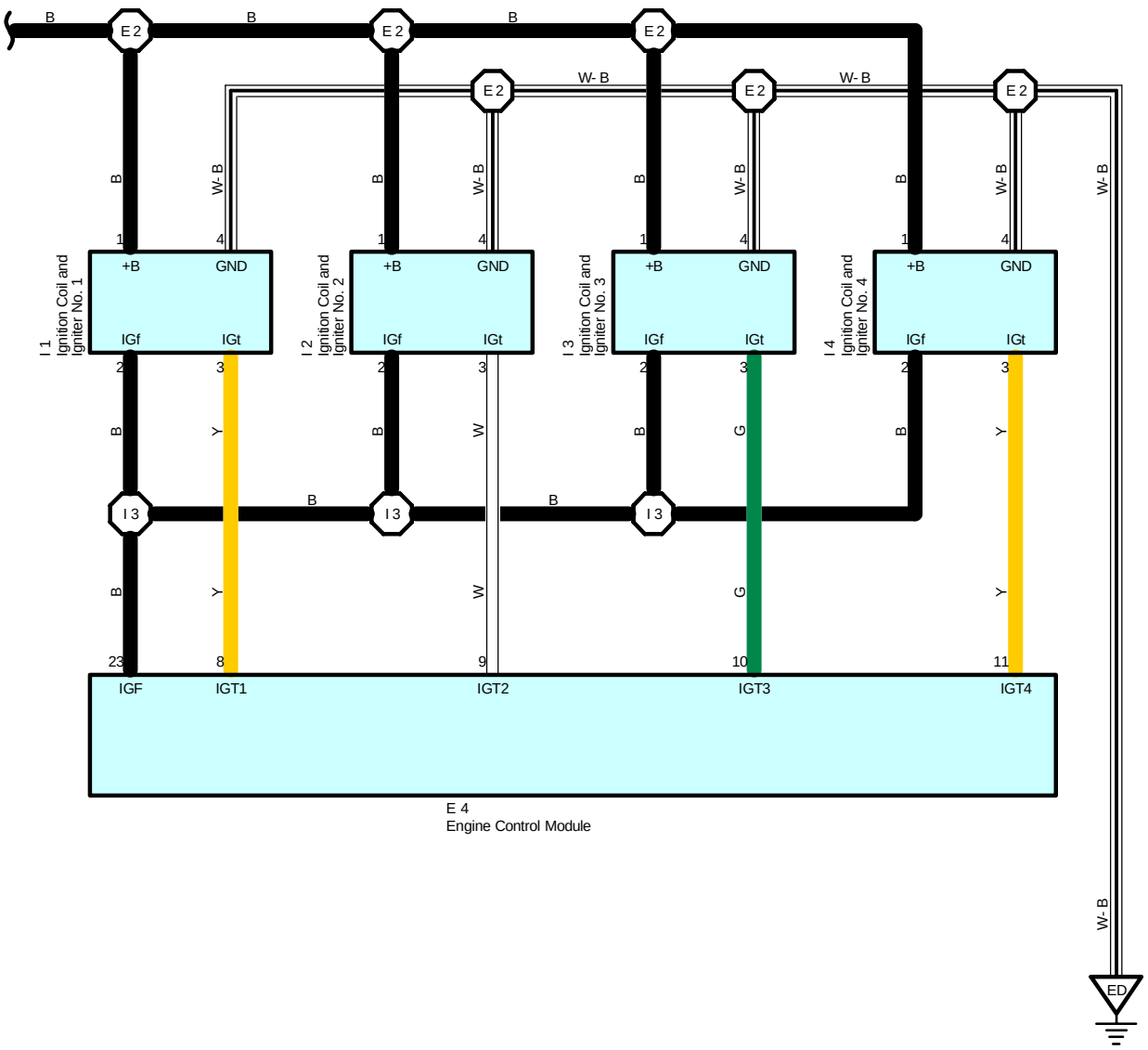
B
E 2
B
E 2
B
E 2
W- B
E 2
E 2
W- B
E 2
W- B
B
W- B
1
4
I 1
Ignition Coil and Igniter No. 1
+B
GND
IGf
IGt
2
3
I 2
Ignition Coil and Igniter No. 2
I 3
Ignition Coil and Igniter No. 3
I 4
Ignition Coil and Igniter No. 4
Y
W
G
I 3
23
8
9
10
11
IGF
IGT1
IGT2
IGT3
IGT4
E 4
Engine Control Module
ED

Ignition

Service Hints

I1, I2, I3, I4 Ignition Coil and Igniter No.1, No.2, No.3, No.4

1-Ground : Approx. 12 volts with the power SW at IG ON position

4-Ground : Always continuity

: Parts Location

Code	See Page	Code	See Page	Code	See Page
E4	47	I2	45	J2	45
F15	51	I3	45	N1	45
I1	45	I4	45	P6	49

: Junction Block and Wire Harness Connector

Code	See Page	Junction Block and Wire Harness (Connector Location)
3A	23	Engine Room Main Wire and Engine Room J/B (Engine Compartment Left)
3I	24	
3K		
3M	23	Frame Wire and Engine Room J/B (Engine Compartment Left)
4I	36	Instrument Panel Wire and Center Connector No.1 (Behind the Combination Meter)
4J		

: Connector Joining Wire Harness and Wire Harness

Code	See Page	Joining Wire Harness and Wire Harness (Connector Location)
EB1	54	Engine Wire and Engine Room Main Wire (Inside of the Engine Room R/B)
IA1	56	Engine Room Main Wire and Instrument Panel Wire (Upper Parts of Front Body Pillar LH)
IA3		
BE1	60	Frame Wire and Floor No.2 Wire (Front Side of Left Quarter Panel)

: Ground Points

Code	See Page	Ground Points Location
ED	54	Engine Block
EF	54	Left Side of the Suspension Tower

: Splice Points

Code	See Page	Wire Harness with Splice Points	Code	See Page	Wire Harness with Splice Points
E2	54	Engine Wire	I3	58	Engine Wire

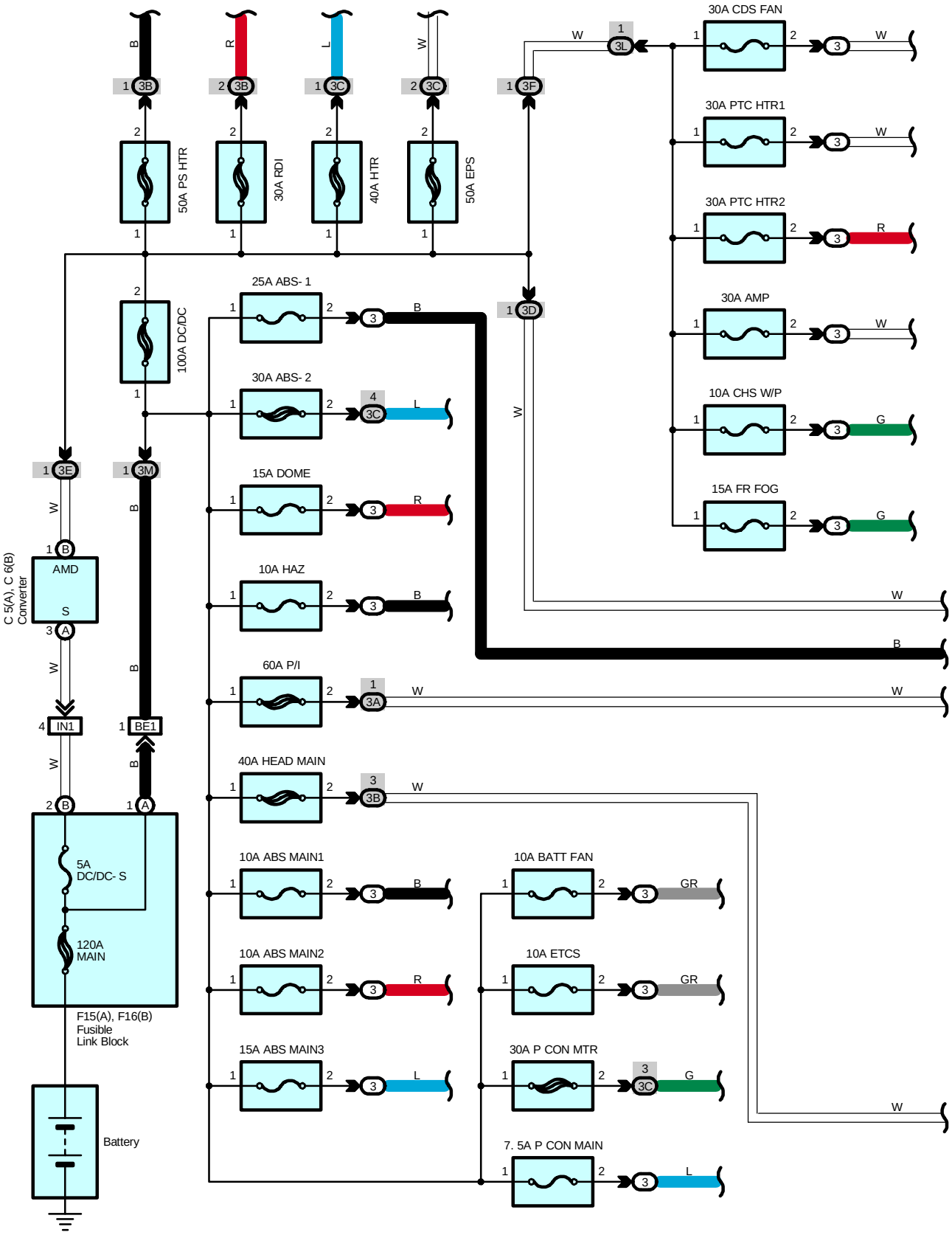
50A PS HTR
30A RDI
40A HTR
50A EPS
100A DC/DC
25A ABS- 1
30A ABS- 2
15A DOME
10A HAZ
60A P/I
40A HEAD MAIN
10A ABS MAIN1
10A ABS MAIN2
15A ABS MAIN3
30A CDS FAN
30A PTC HTR1
30A PTC HTR2
30A AMP
10A CHS W/P
15A FR FOG
10A BATT FAN
10A ETCS
30A P CON MTR
7. 5A P CON MAIN
AMD
C 5(A), C 6(B)
Converter
5A
DC/DC- S
120A
MAIN
F15(A), F16(B)
Fusible
Link Block
Battery

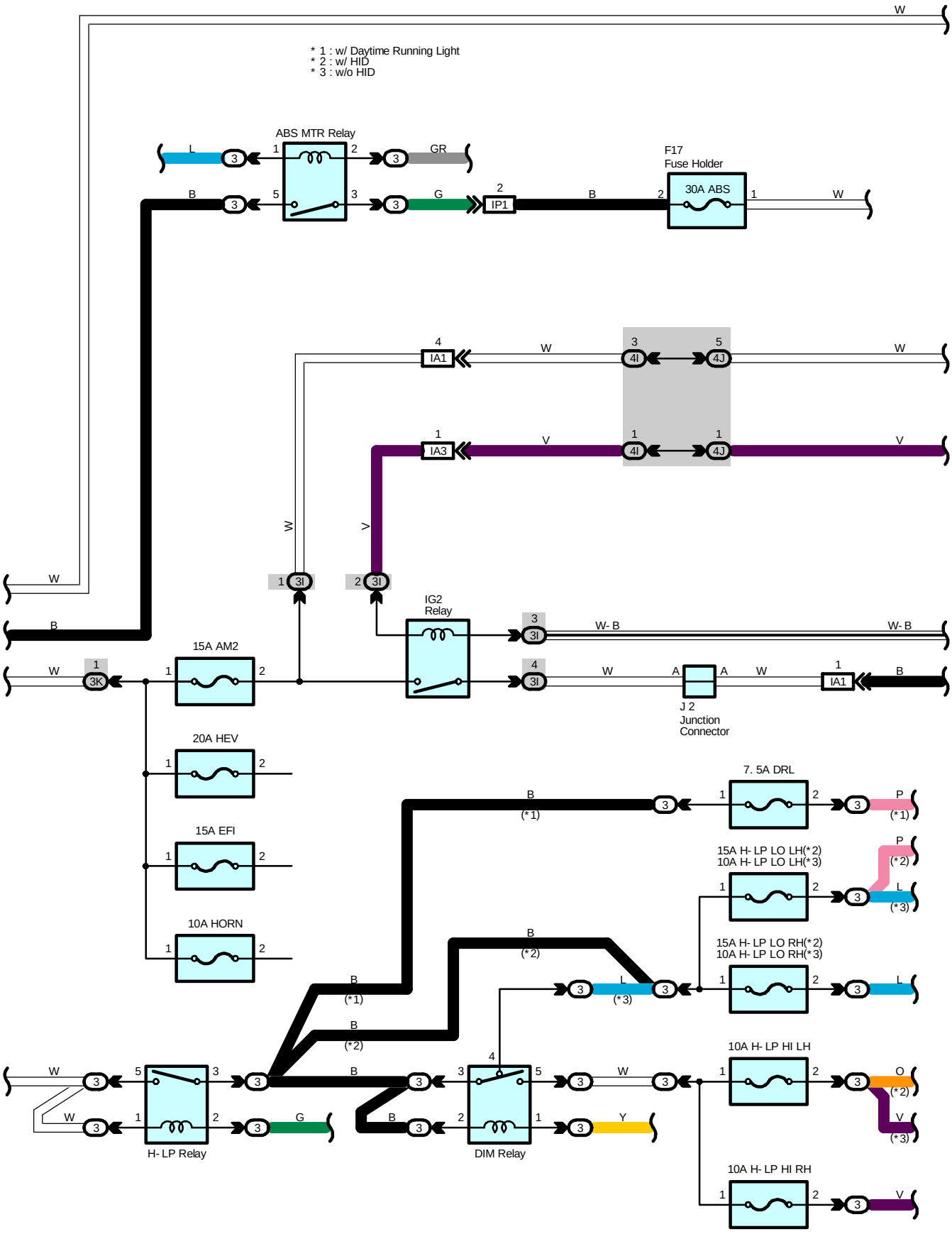
* 1 : w/ Daytime Running Light
* 2 : w/ HID
* 3 : w/o HID
ABS MTR Relay
F17
Fuse Holder
30A ABS
IP1
IA1
IA3
4I
4J
3I
IG2
Relay
15A AM2
3K
J 2
Junction
Connector
20A HEV
15A EFI
10A HORN
7. 5A DRL
15A H- LP LO LH(*2)
10A H- LP LO LH(*3)
15A H- LP LO RH(*2)
10A H- LP LO RH(*3)
10A H- LP HI LH
10A H- LP HI RH
H- LP Relay
DIM Relay

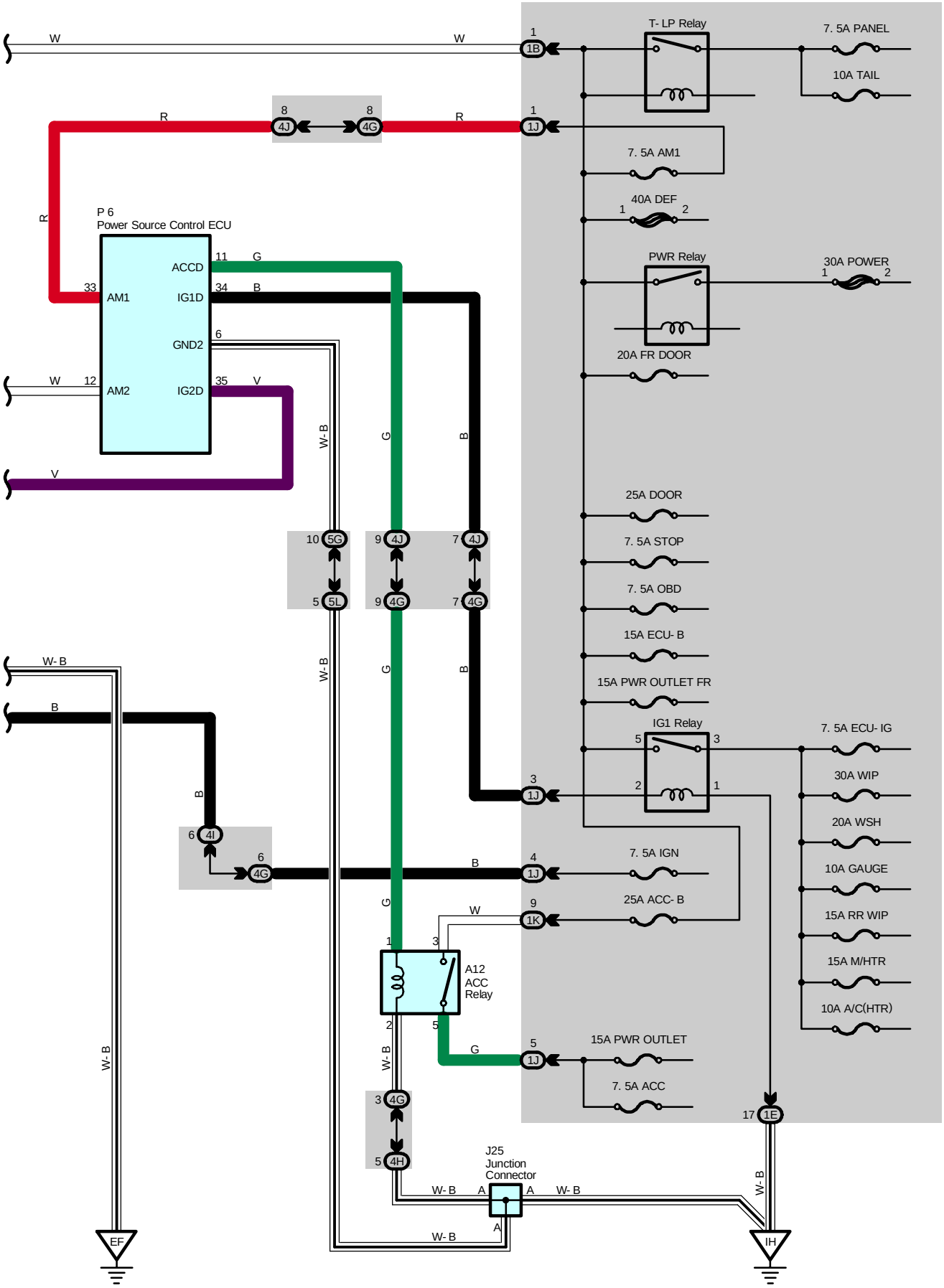
T- LP Relay
7. 5A PANEL
10A TAIL
7. 5A AM1
40A DEF
PWR Relay
30A POWER
20A FR DOOR
P 6
Power Source Control ECU
ACCD
AM1
IG1D
GND2
AM2
IG2D
25A DOOR
7. 5A STOP
7. 5A OBD
15A ECU- B
15A PWR OUTLET FR
IG1 Relay
7. 5A ECU- IG
30A WIP
20A WSH
10A GAUGE
15A RR WIP
15A M/HTR
10A A/C(HTR)
7. 5A IGN
25A ACC- B
A12
ACC
Relay
15A PWR OUTLET
7. 5A ACC
J25
Junction
Connector
EF
IH

Service Hints

P6 Power Source Control ECU

12, 33-Ground : Always approx. 12 volts
34, 35-Ground : Approx. 12 volts with the power SW at IG ON position
11-Ground : Approx. 12 volts with the power SW at ACC ON position
6-Ground : Always continuity

: Parts Location

Code		See Page	Code		See Page	Code	See Page
A12		46	F15	A	51	J2	45
C5	A	44	F16	B	51	J25	48
C6	B	44	F17		47	P6	49

: Relay Blocks

Code	See Page	Relay Blocks (Relay Block Location)
3	22	Engine Room R/B (Engine Compartment Left)

: Junction Block and Wire Harness Connector

Code	See Page	Junction Block and Wire Harness (Connector Location)
1B	28	Engine Room Main Wire and Driver Side J/B (Lower Finish Panel)
1E	28	Instrument Panel Wire and Driver Side J/B (Lower Finish Panel)
1J		
1K	29	
3A	23	Engine Room Main Wire and Engine Room J/B (Engine Compartment Left)
3B		
3C		
3D		
3E		
3F		
3I	24	
3K		
3L	22	
3M	23	Frame Wire and Engine Room J/B (Engine Compartment Left)
4G	36	Instrument Panel Wire and Center Connector No.1 (Behind the Combination Meter)
4H		
4I		
4J		
5G	40	Instrument Panel Wire and Center Connector No.2 (Instrument Panel Brace RH)
5L		

: Connector Joining Wire Harness and Wire Harness

Code	See Page	Joining Wire Harness and Wire Harness (Connector Location)
IA1	56	Engine Room Main Wire and Instrument Panel Wire (Upper Parts of Front Body Pillar LH)
IA3		
IN1	58	Floor No.2 Wire and Engine Room Main Wire (Right Kick Panel)
IP1	58	Engine Room No.2 Wire and Engine Room Main Wire (Upper Parts of Front Body Pillar LH)
BE1	60	Frame Wire and Floor No.2 Wire (Front Side of Left Quarter Panel)

: Ground Points

Code	See Page	Ground Points Location
EF	54	Left Side of the Suspension Tower
IH	56	Cowl Side Panel LH

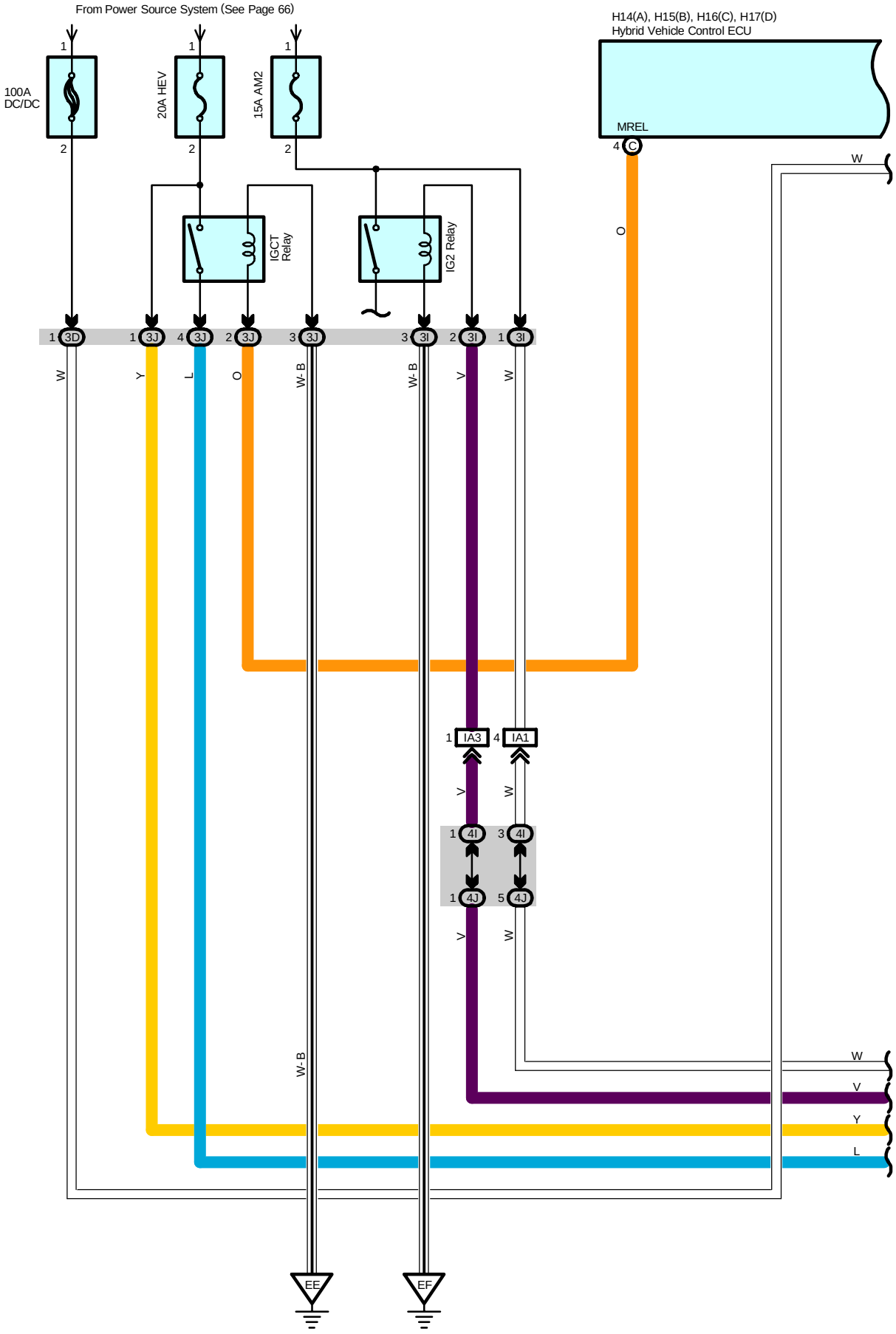
From Power Source System (See Page 66)
H14(A), H15(B), H16(C), H17(D)
Hybrid Vehicle Control ECU
MREL
100A
DC/DC
20A HEV
15A AM2
IGCT
Relay
IG2 Relay
3D
3J
3I
4I
4J
IA3
IA1
W
Y
L
O
W- B
V
EE
EF

H14(A), H15(B), H16(C), H17(D)
Hybrid Vehicle Control ECU

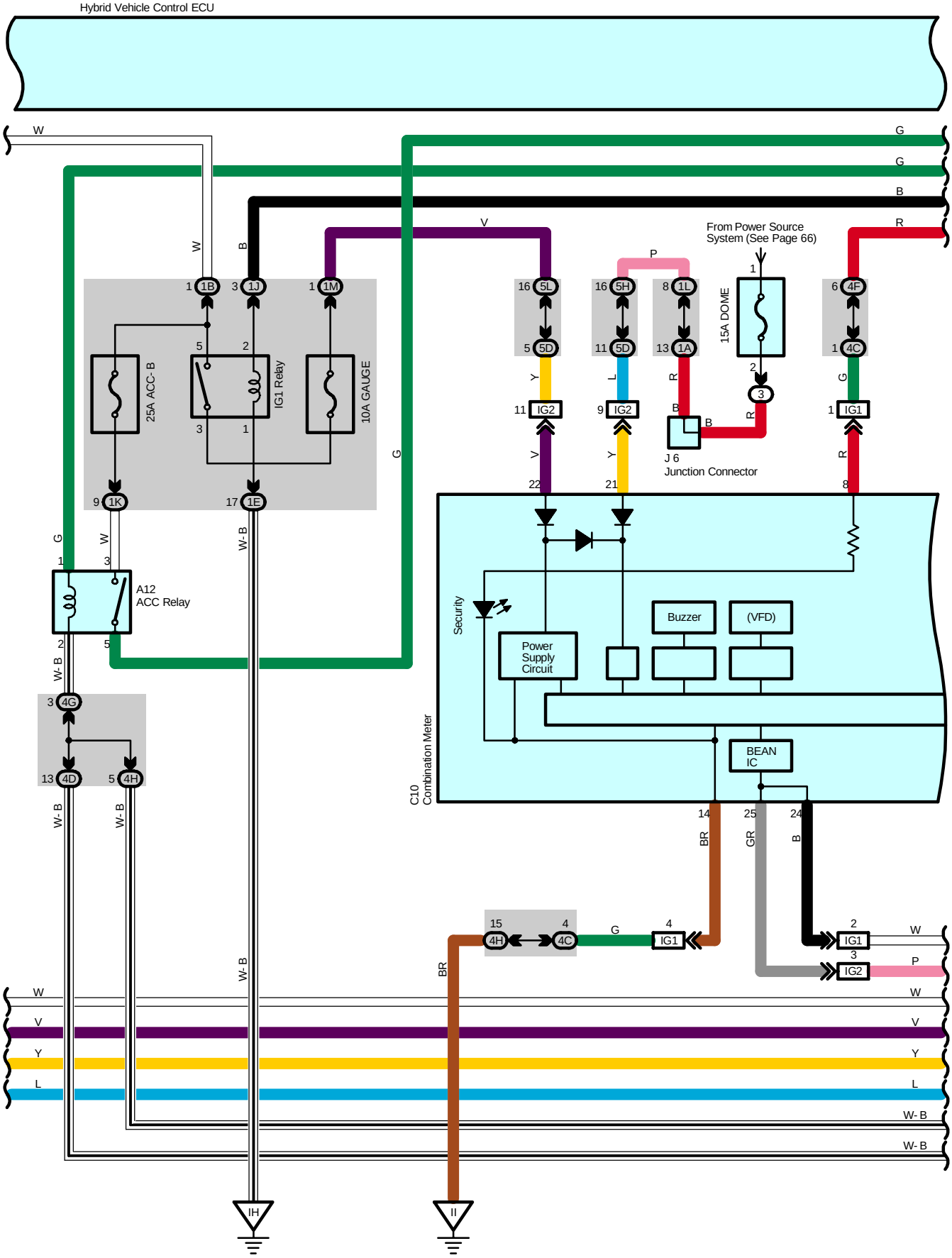

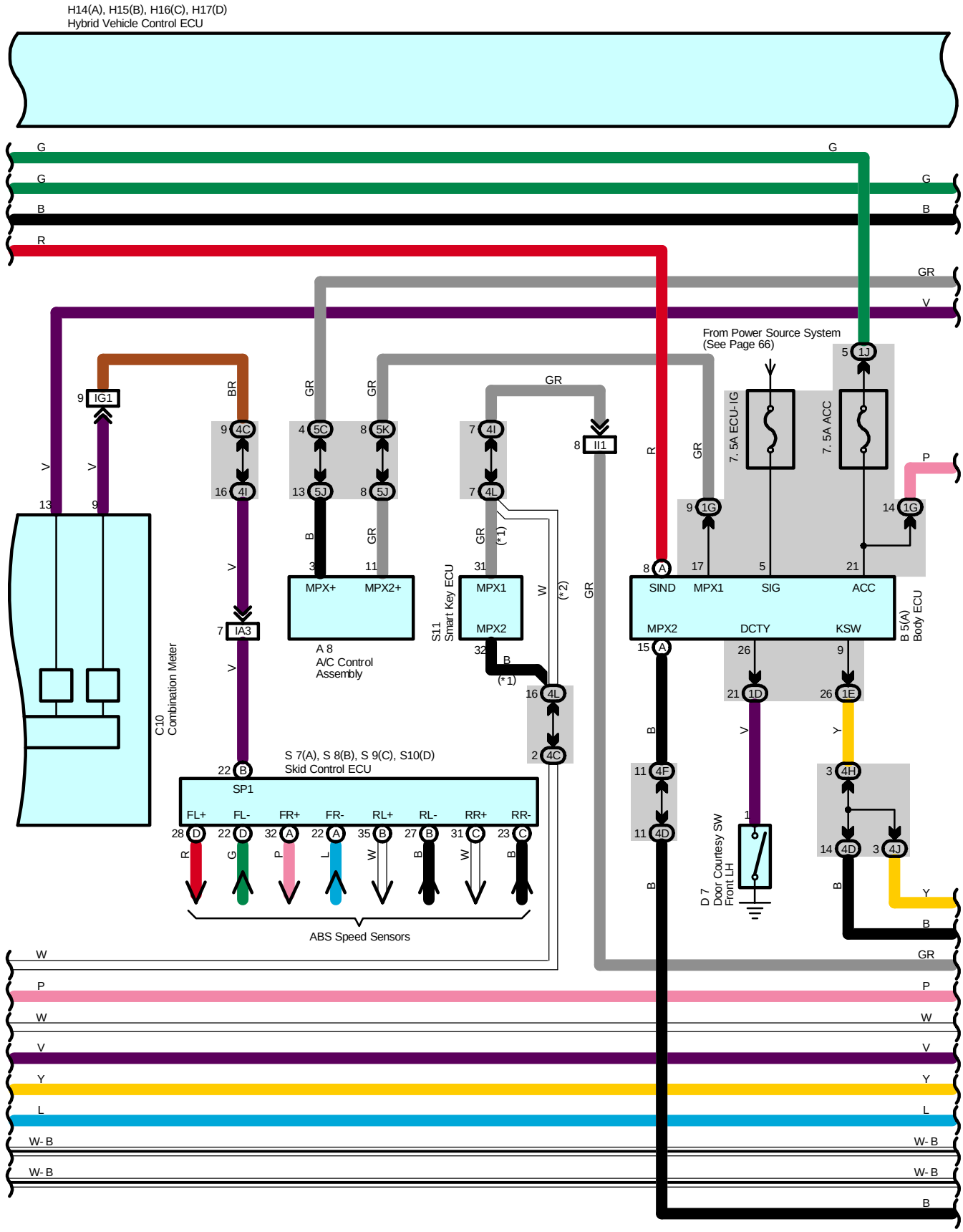
H14(A), H15(B), H16(C), H17(D)
Hybrid Vehicle Control ECU
From Power Source System
(See Page 66)
7. 5A ECU-IG
7. 5A ACC
C10
Combination Meter
A 8
A/C Control
Assembly
S11
Smart Key ECU
B 5(A)
Body ECU
S 7(A), S 8(B), S 9(C), S10(D)
Skid Control ECU
SP1
FL+
FL-
FR+
FR-
RL+
RL-
RR+
RR-
ABS Speed Sensors
D 7
Door Courtesy SW
Front LH
MPX+
MPX2+
MPX1
MPX2
SIND
MPX1
SIG
ACC
MPX2
DCTY
KSW
IG1
IA3
II1
(*1)
(*2)

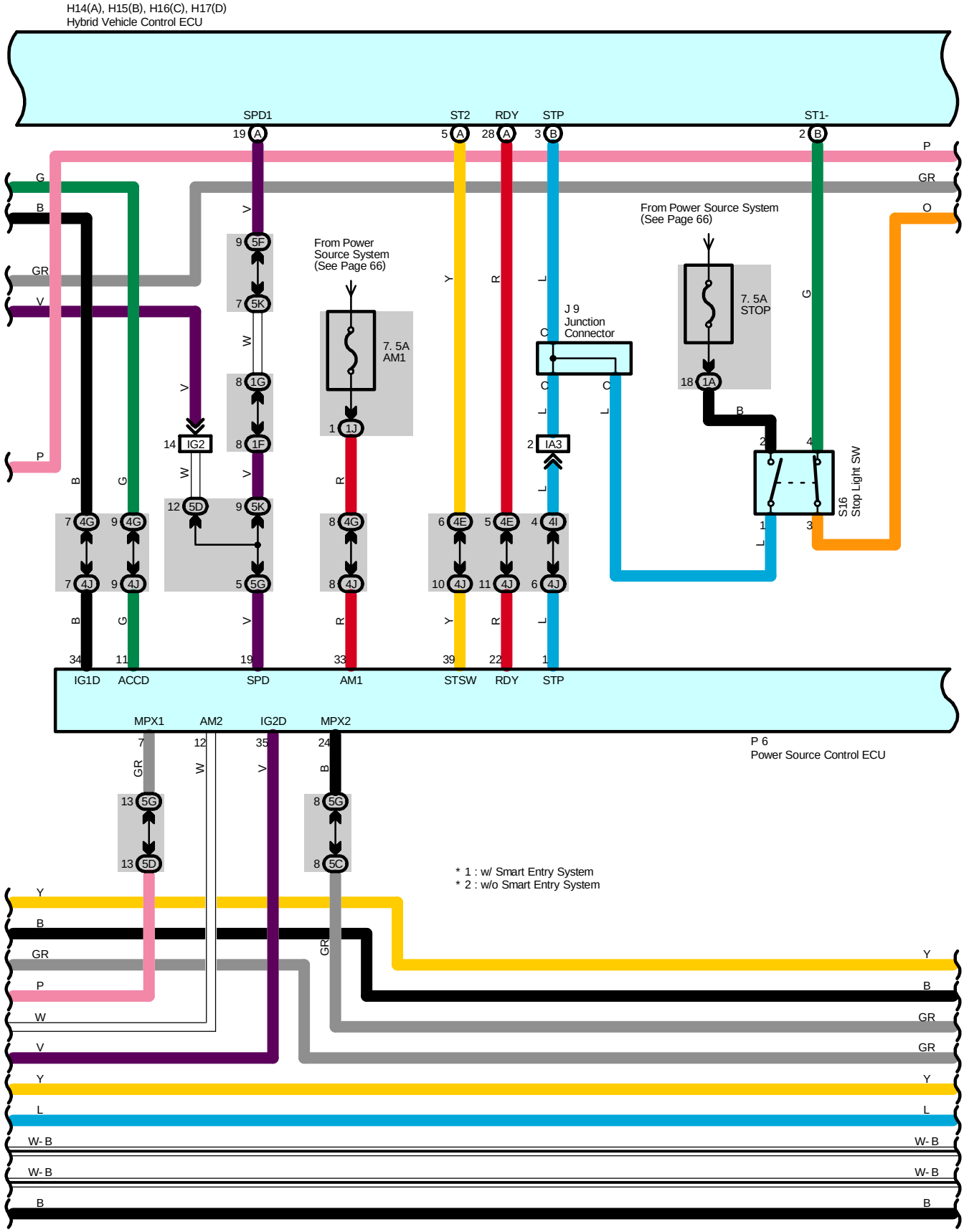
H14(A), H15(B), H16(C), H17(D)
Hybrid Vehicle Control ECU
SPD1
ST2
RDY
STP
ST1-
From Power Source System (See Page 66)
7. 5A AM1
J 9 Junction Connector
From Power Source System (See Page 66)
7. 5A STOP
S16 Stop Light SW
IG1D
ACCD
SPD
AM1
STSW
RDY
STP
MPX1
AM2
IG2D
MPX2
P 6
Power Source Control ECU
* 1 : w/ Smart Entry System
* 2 : w/o Smart Entry System

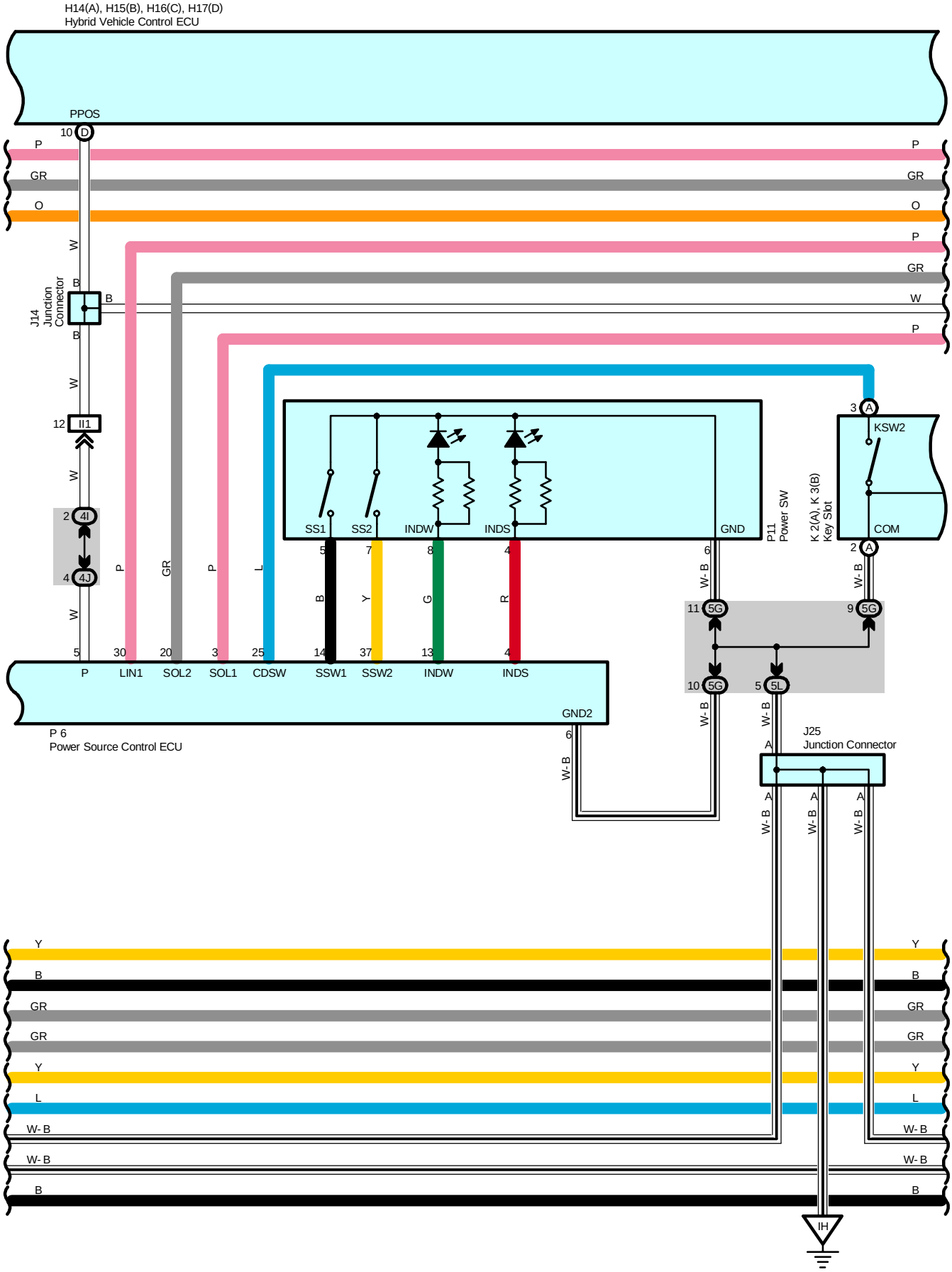
H14(A), H15(B), H16(C), H17(D)
Hybrid Vehicle Control ECU
PPOS
10 D
P
GR
O
W
B
J14
Junction
Connector
B
W
12 II1
W
2 4I
4 4J
W
5
P
30
LIN1
20
SOL2
3
SOL1
25
CDSW
14
SSW1
37
SSW2
13
INDW
4
INDS
GND2
6
W-B
P 6
Power Source Control ECU
SS1
SS2
INDW
INDS
GND
5
7
8
4
6
B
Y
G
R
W-B
P11
Power SW
3 A
KSW2
COM
2 A
K 2(A), K 3(B)
Key Slot
11 5G
9 5G
10 5G
5 5L
J25
Junction Connector
A
Y
B
GR
L
W-B

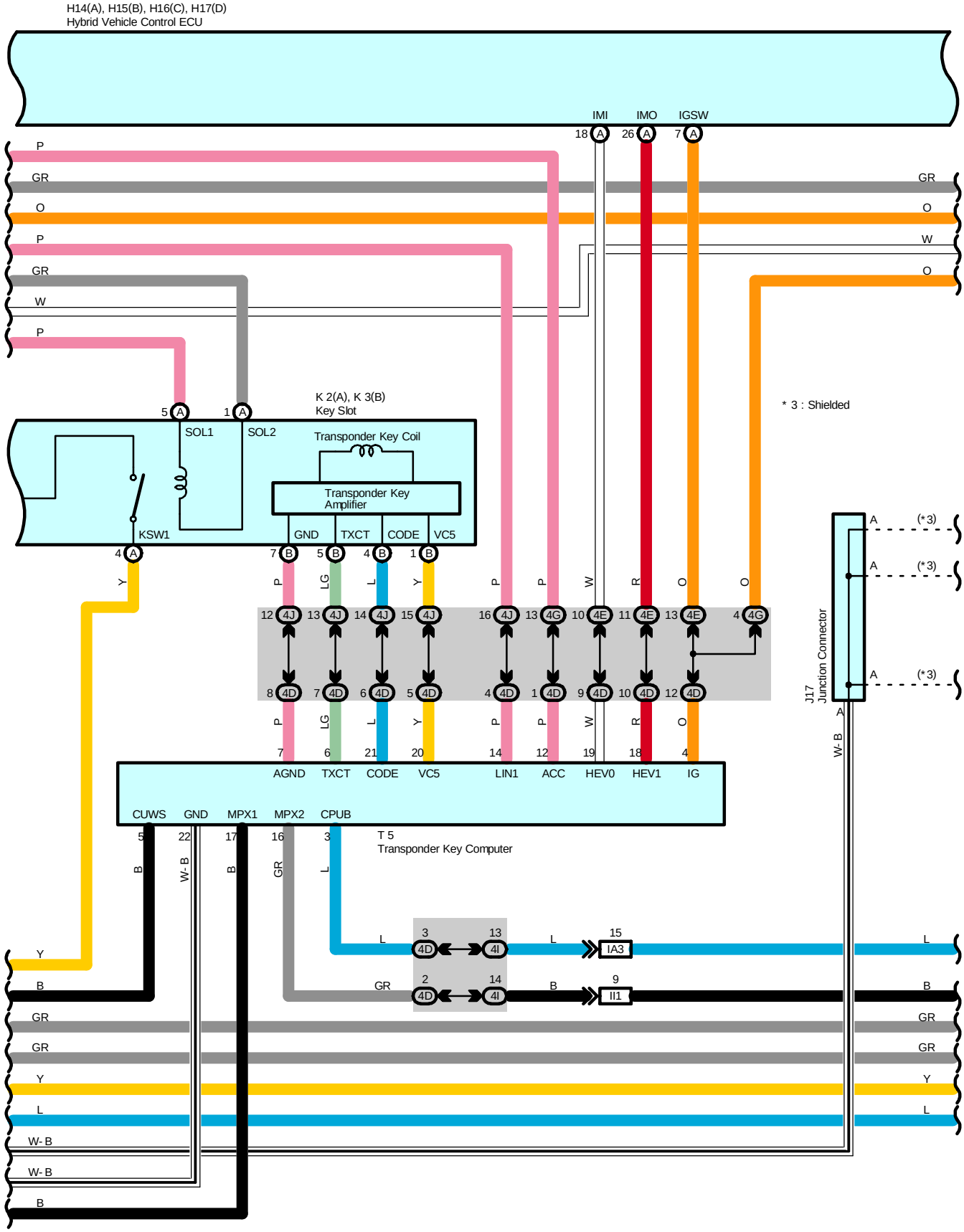
H14(A), H15(B), H16(C), H17(D)
Hybrid Vehicle Control ECU
IMI
IMO
IGSW
18 A
26 A
7 A
P
GR
O
P
GR
W
P
GR
O
W
O
5 A
1 A
SOL1
SOL2
K 2(A), K 3(B)
Key Slot
Transponder Key Coil
Transponder Key
Amplifier
KSW1
GND
TXCT
CODE
VC5
* 3 : Shielded
4 A
7 B
5 B
4 B
1 B
Y
P
LG
L
Y
P
P
W
R
O
O
12 4J
13 4J
14 4J
15 4J
16 4J
13 4G
10 4E
11 4E
13 4E
4 4G
8 4D
7 4D
6 4D
5 4D
4 4D
1 4D
9 4D
10 4D
12 4D
P
LG
L
Y
P
P
W
R
O
7
6
21
20
14
12
19
18
4
AGND
TXCT
CODE
VC5
LIN1
ACC
HEV0
HEV1
IG
J17
Junction Connector
A
(*3)
A
(*3)
A
(*3)
A
W- B
CUWS
GND
MPX1
MPX2
CPUB
5
22
17
16
3
T 5
Transponder Key Computer
B
W- B
B
GR
L
L
3
4D
13
4I
15
IA3
GR
2
4D
14
4I
B
9
II1
Y
B
GR
GR
Y
L
W- B
W- B
B
L
B
GR
GR
Y
L

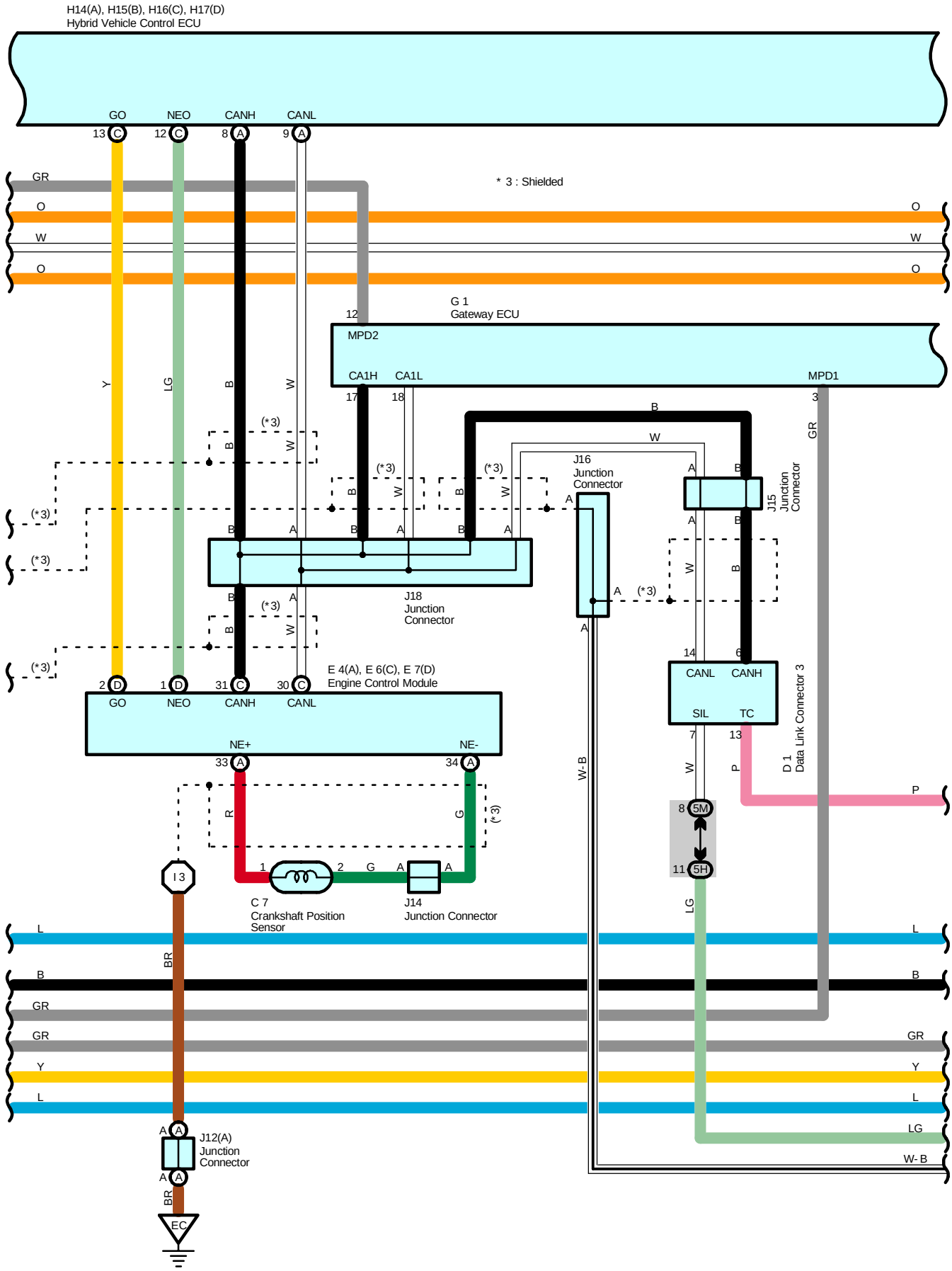
H14(A), H15(B), H16(C), H17(D)
Hybrid Vehicle Control ECU
GO
NEO
CANH
CANL
13 C
12 C
8 A
9 A
* 3 : Shielded
GR
O
W
O
O
W
O
G 1
Gateway ECU
12
MPD2
CA1H
CA1L
MPD1
17
18
3
Y
LG
B
W
(*3)
J16
Junction
Connector
J15
Junction
Connector
J18
Junction
Connector
E 4(A), E 6(C), E 7(D)
Engine Control Module
2 D
1 D
31 C
30 C
GO
NEO
CANH
CANL
NE+
NE-
33 A
34 A
R
G
I 3
1
2
G
A
C 7
Crankshaft Position
Sensor
J14
Junction Connector
14
6
CANL
CANH
SIL
TC
7
13
P
D 1
Data Link Connector 3
8 5M
11 5H
LG
W-B
L
BR
B
GR
Y
A A
J12(A)
Junction
Connector
EC

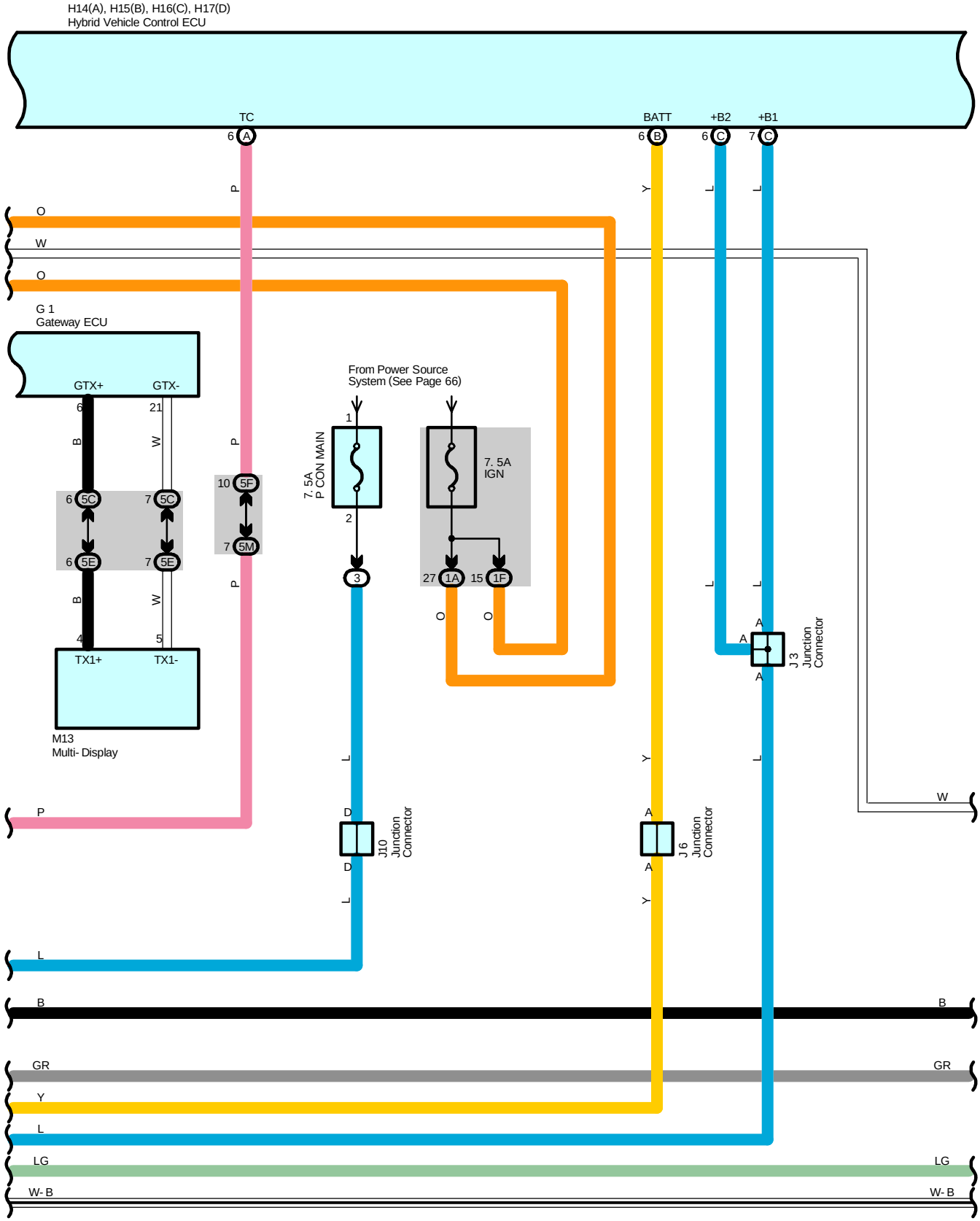
H14(A), H15(B), H16(C), H17(D)
Hybrid Vehicle Control ECU
TC
BATT
+B2
+B1
G 1
Gateway ECU
GTX+
GTX-
TX1+
TX1-
M13
Multi- Display
From Power Source
System (See Page 66)
7. 5A
P CON MAIN
7. 5A
IGN
J 3
Junction
Connector
J10
Junction
Connector
J 6
Junction
Connector
O
W
P
L
B
GR
Y
LG
W- B

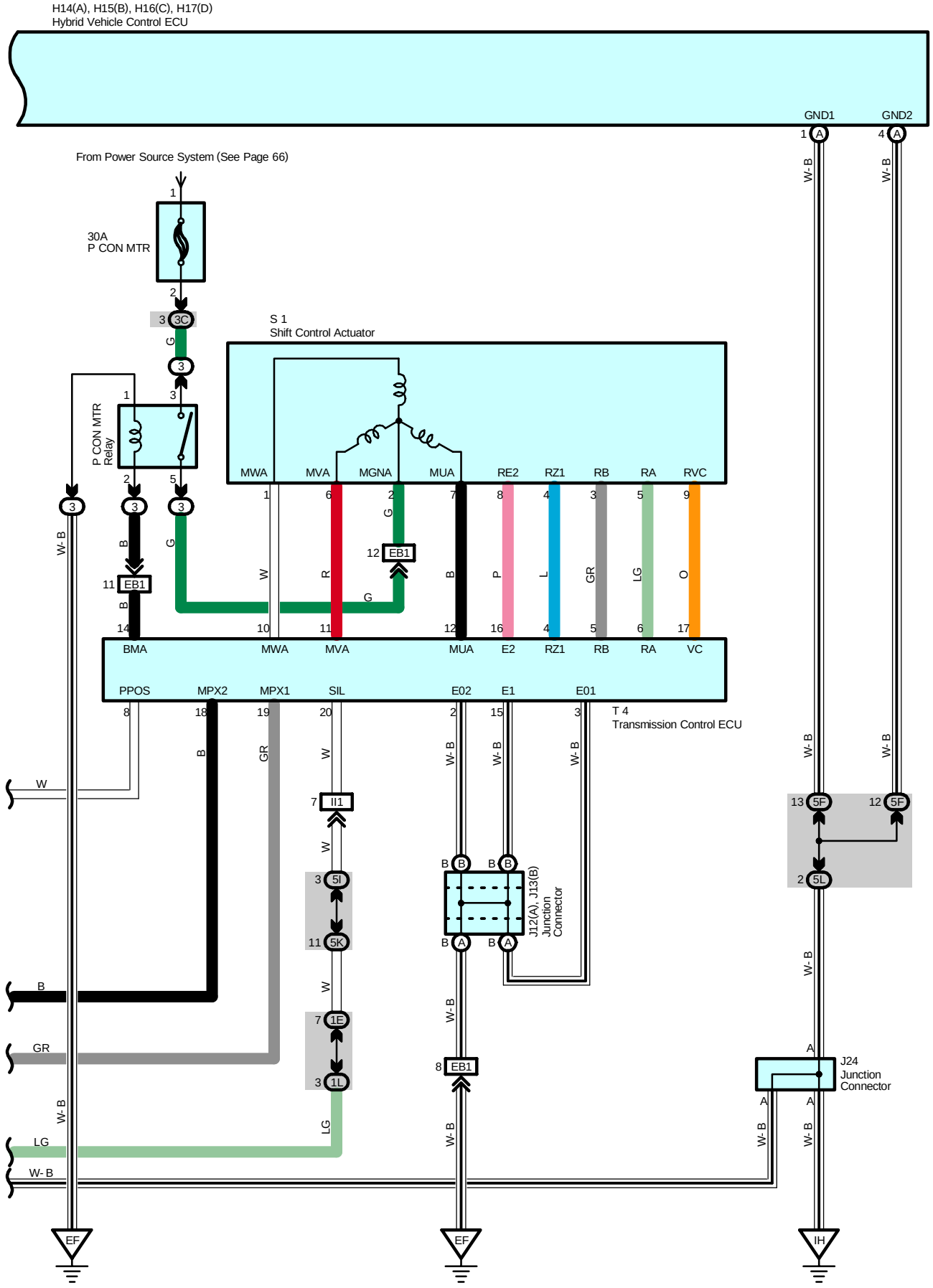
H14(A), H15(B), H16(C), H17(D)
Hybrid Vehicle Control ECU
GND1
GND2
From Power Source System (See Page 66)
30A
P CON MTR
S 1
Shift Control Actuator
P CON MTR
Relay
MWA
MVA
MGNA
MUA
RE2
RZ1
RB
RA
RVC
BMA
MWA
MVA
MUA
E2
RZ1
RB
RA
VC
PPOS
MPX2
MPX1
SIL
E02
E1
E01
T 4
Transmission Control ECU
J112(A), J113(B)
Junction
Connector
J24
Junction
Connector
EF
EF
IH

System Outline

This is the system to change power supply mode by pushing power SW and to start hybrid system by operating power SW and brake pedal simultaneously. It also has function to hold the electrical key in the key slot and not to release the key from it unless the power supply condition and shift range position are met. If there is abnormality in the system, amber portion of power SW blinks to warn the driver.

1. ACC ON Operation

When the electrical key turns on half-inserted SW and deep-inserted SW after inserting in the key slot, transponder key computer activates transponder key amplifier incorporated in key slot to identify ID. After the identification, if power SW is pushed without depressing brake pedal, power source control ECU starts. The ECU confirms that the brake pedal is not depressed from signal of stop light SW and also requests transponder key computer for ID identification result. If the ID identification is normal, power source control ECU turns on ACC relay and changes indicator of power SW to green lighting. In consequence, power supply is set to ACC ON condition.

2. IG ON Operation

If power SW is pushed without depressing brake pedal when ACC ON, power source control ECU confirms that the brake pedal is not depressed, and then turns on IG1 relay and IG2 relay as well as change indicator of power SW to amber lighting. Power supply is IG ON condition then.

3. Hybrid Start-Up Operation (READY)

When the electrical key turns on half-inserted SW and deep-inserted SW after inserting in the key slot, transponder key computer activates transponder key amplifier incorporated in key slot to identify ID. After the identification, if power SW is pushed with depressing brake pedal, power source control ECU starts. The ECU confirms that the brake pedal is depressed from signal of stop light SW and also requests transponder key computer for ID identification result. If the ID identification is normal, the ECU turns on ACC relay, IG1 relay and IG2 relay, and changes indicator of power SW to amber lighting. Power supply is IG ON condition then.

After that, power source control ECU sends start-up signal to hybrid vehicle control ECU. Hybrid vehicle control ECU and transponder key computer make communication for start-up permission. Hybrid vehicle control ECU controls to start-up hybrid system (READY).

At starting up hybrid system, power source control ECU controls to light off indicator of power SW.

4. Power Supply Off Operation

∗ When shift range is in P range

If power SW is pushed with power supply at READY condition while the vehicle is stationary, power source control ECU confirms that shift range is in P range, and then turns off ACC relay, IG1 relay and IG2 relay to put power supply in OFF condition. The ECU also controls to light off indicator of power SW.

If power SW is pushed with power supply at IG ON condition and without depressing brake pedal while the vehicle is stationary, power source control ECU confirms that shift range is in P range, and then turns off ACC relay, IG1 relay and IG2 relay to put power supply in OFF condition. The ECU also controls to light off indicator of power SW.

If electrical key is taken off from key slot with power supply at ACC ON condition while the vehicle is stationary, power source control ECU controls to put power supply in OFF condition automatically, which lights off indicator of power SW.

∗ When shift range is in other than P range

If power SW is pushed with power supply at IG ON (Including READY) condition while the vehicle is stationary, parking lock operation is carried out. After that, power source control ECU confirms that shift range is in P range and then turns off ACC relay, IG1 relay and IG2 relay to put power supply in OFF condition. The ECU controls to light off indicator of power SW.

5. Key Interlock Operation

Power source control ECU controls to hold the electrical key in the key slot and not to release the key from it unless the power supply condition and shift range position are met. Power supply condition and shift range position during the key interlock in operation are as follows;

∗ At starting-up hybrid system
∗ At power supply at IG ON
∗ At power supply at ACC ON and shift range at other than P range

6. Emergency Stop Operation of Hybrid System

If power SW is kept pushed more than three seconds during driving, hybrid system stops and power supply is changed to ACC ON.

7. Power Supply Resuming Control

Power source control ECU always stores power supply condition (OFF, ACC ON, IG ON)

When power supply is resumed after shutting off power supply by disconnecting battery terminal, original power supply condition returns due to control of power source control ECU.

Service Hints

P6 Power Source Control ECU

12, 33-Ground : Always approx. 12 volts
34, 35-Ground : Approx. 12 volts with the power SW at IG ON position
11-Ground : Approx. 12 volts with the power SW at ACC ON or IG ON position
6-Ground : Always continuity
1-Ground : Approx. 12 volts with the brake pedal depressed

○ : Parts Location

Code	See Page	Code	See Page	Code	See Page
A8	46	H17 D	47	K2 A	48
A12	46	J3	45	K3 B	48
B5 A	46	J6	48	M13	48
C7	44	J9	48	P6	49
C10	47	J10	48	P11	49
D1	47	J12 A	48	S1	45
D7	50	J13 B	48	S7 A	49
E4 A	47	J14	48	S8 B	49
E6 C	47	J15	48	S9 C	49
E7 D	47	J16	48	S10 D	49
G1	47	J17	48	S11	49
H14 A	47	J18	48	S16	49
H15 B	47	J24	48	T4	49
H16 C	47	J25	48	T5	49

▭ : Relay Blocks

Code	See Page	Relay Blocks (Relay Block Location)
3	22	Engine Room R/B (Engine Compartment Left)

: Junction Block and Wire Harness Connector

Code	See Page	Junction Block and Wire Harness (Connector Location)
1A	28	Engine Room Main Wire and Driver Side J/B (Lower Finish Panel)
1B		
1D	28	Floor Wire and Driver Side J/B (Lower Finish Panel)
1E	28	Instrument Panel Wire and Driver Side J/B (Lower Finish Panel)
1F		
1G		
1J		
1K	29	
1L		
1M		
3C	23	Engine Room Main Wire and Engine Room J/B (Engine Compartment Left)
3D		
3I	24	
3J		
4C	36	Instrument Panel Wire and Center Connector No.1 (Behind the Combination Meter)
4D		
4E		
4F		
4G		
4H		
4I		
4J		
4L		
5C	40	Instrument Panel Wire and Center Connector No.2 (Instrument Panel Brace RH)
5D		
5E		
5F		
5G		
5H		
5I		
5J		
5K		
5L		
5M		

: Connector Joining Wire Harness and Wire Harness

Code	See Page	Joining Wire Harness and Wire Harness (Connector Location)
EB1	54	Engine Wire and Engine Room Main Wire (Inside of the Engine Room R/B)
IA1	56	Engine Room Main Wire and Instrument Panel Wire (Upper Parts of Front Body Pillar LH)
IA3		
IG1	58	Instrument Panel Wire and Instrument Panel No.2 Wire (Behind the Combination Meter)
IG2		
II1	58	Engine Wire and Instrument Panel Wire (Behind the Glove Box)

: Ground Points

Code	See Page	Ground Points Location
EC	54	Engine Block
EE	54	Left Side of the Suspension Tower
EF		
IH	56	Cowl Side Panel LH
II	56	Instrument Panel Brace LH

: **Splice Points**

Code	See Page	Wire Harness with Splice Points	Code	See Page	Wire Harness with Splice Points
I3	58	Engine Wire			

Radiator Fan and Condenser Fan

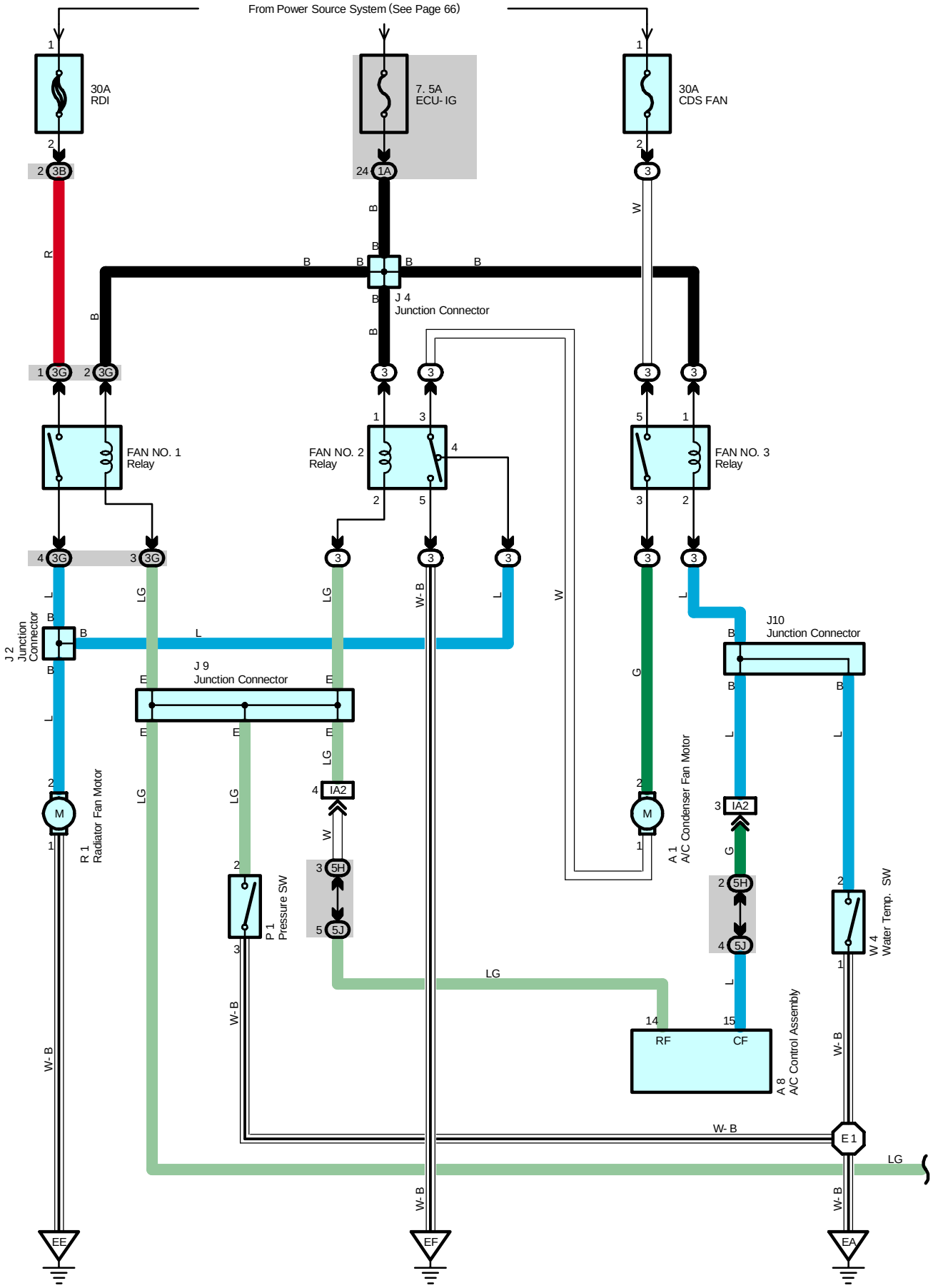

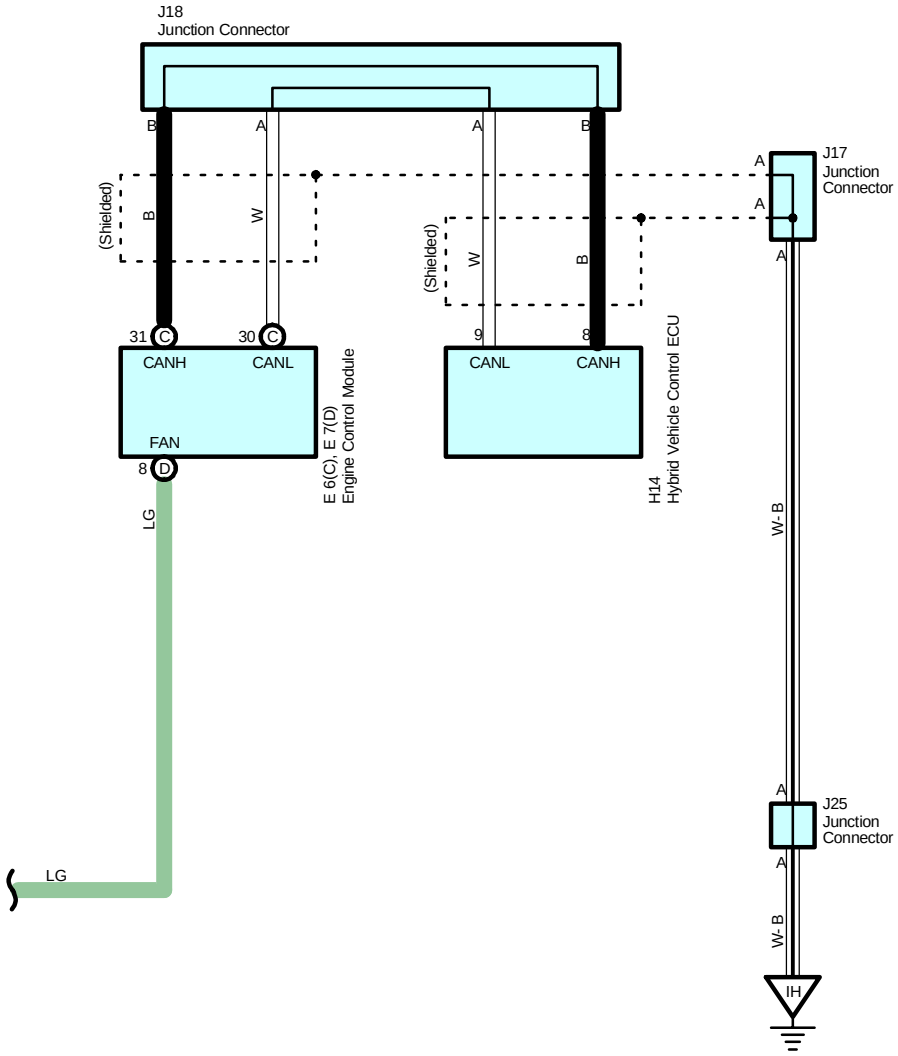
J18
Junction Connector
B
A
A
B
(Shielded)
B
W
W
(Shielded)
B
31
C
30
C
9
8
CANH
CANL
CANL
CANH
FAN
8
D
E 6(C), E 7(D)
Engine Control Module
H14
Hybrid Vehicle Control ECU
LG
LG
A
A
J17
Junction
Connector
A
W- B
A
J25
Junction
Connector
A
W- B
IH

Radiator Fan and Condenser Fan

System Outline

The radiator fan motor and A/C condenser fan motor operate according to the water temp. SW (Inverter), A/C single pressure SW, engine coolant temp. and the A/C system condition. The FAN NO.1 relay, FAN NO.2 relay, FAN NO.3 relay are turned on/off, to operate the fan motors at low speed (In series), or high speed (In parallel).

1. Low Speed operation

When the water temp. SW (Inverter) is on and/or A/C control assembly is in operation, the radiator fan motor and A/C condenser fan motor operate at low speed.

2. High Speed Operation

When the pressure SW (Single) is on, engine control module and/or A/C control assembly, the radiator fan motor operate and A/C condenser fan motor operates at high speed.

Service Hints

P1 Pressure SW

3-2 : Close above approx. 1520 kpa (15.5 kgf/cm^2. 220 psi)
Open below approx. 1230 kpa (12.5 kgf/cm^2. 178 psi)

: Parts Location

Code	See Page	Code	See Page	Code	See Page
A1	44	J2	45	J18	48
A8	46	J4	45	J25	48
E6 C	47	J9	48	P1	45
E7 D	47	J10	48	R1	45
H14	47	J17	48	W4	45

: Relay Blocks

Code	See Page	Relay Blocks (Relay Block Location)
3	22	Engine Room R/B (Engine Compartment Left)

: Junction Block and Wire Harness Connector

Code	See Page	Junction Block and Wire Harness (Connector Location)
1A	28	Engine Room Main Wire and Driver Side J/B (Lower Finish Panel)
3B	23	Engine Room Main Wire and Engine Room J/B (Engine Compartment Left)
3G	24	
5H	40	Instrument Panel Wire and Center Connector No.2 (Instrument Panel Brace RH)
5J		

: Connector Joining Wire Harness and Wire Harness

Code	See Page	Joining Wire Harness and Wire Harness (Connector Location)
IA2	56	Engine Room Main Wire and Instrument Panel Wire (Upper Parts of Front Body Pillar LH)

: Ground Points

Code	See Page	Ground Points Location
EA	54	Right Side of the Fender Apron
EE	54	Left Side of the Suspension Tower
EF		
IH	56	Cowl Side Panel LH

: Splice Points

Code	See Page	Wire Harness with Splice Points	Code	See Page	Wire Harness with Splice Points
E1	54	Engine Room Main Wire			

F RELAY LOCATIONS

[Engine Compartment]

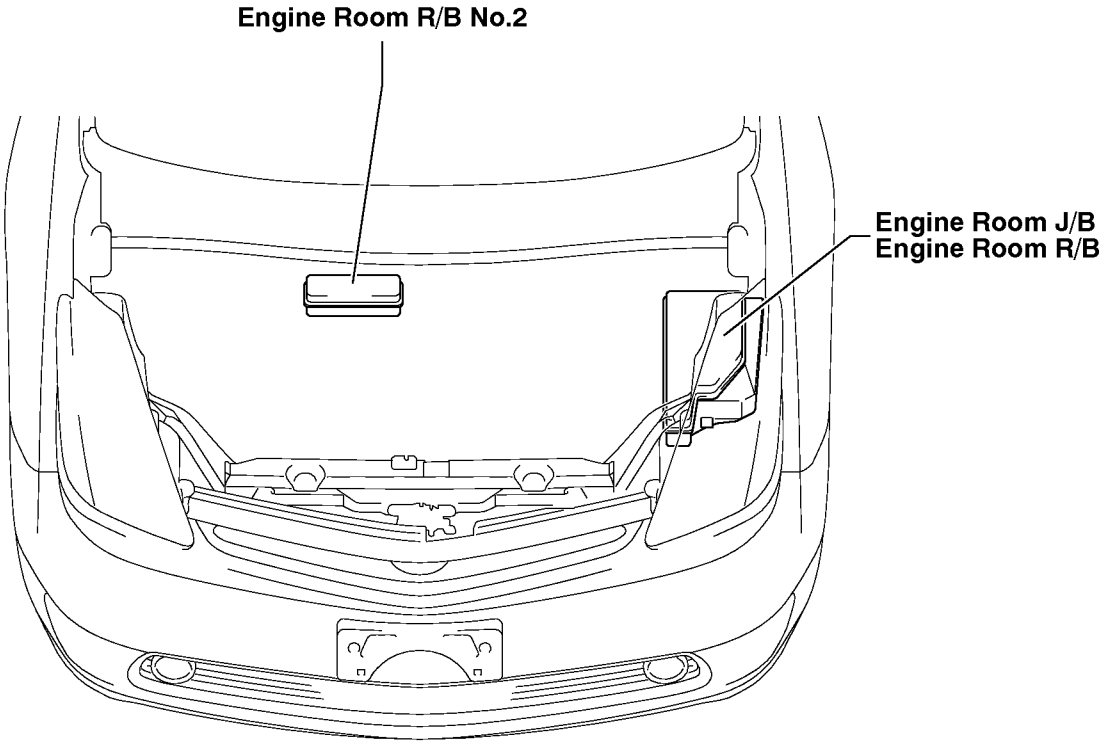

[Instrument Panel]

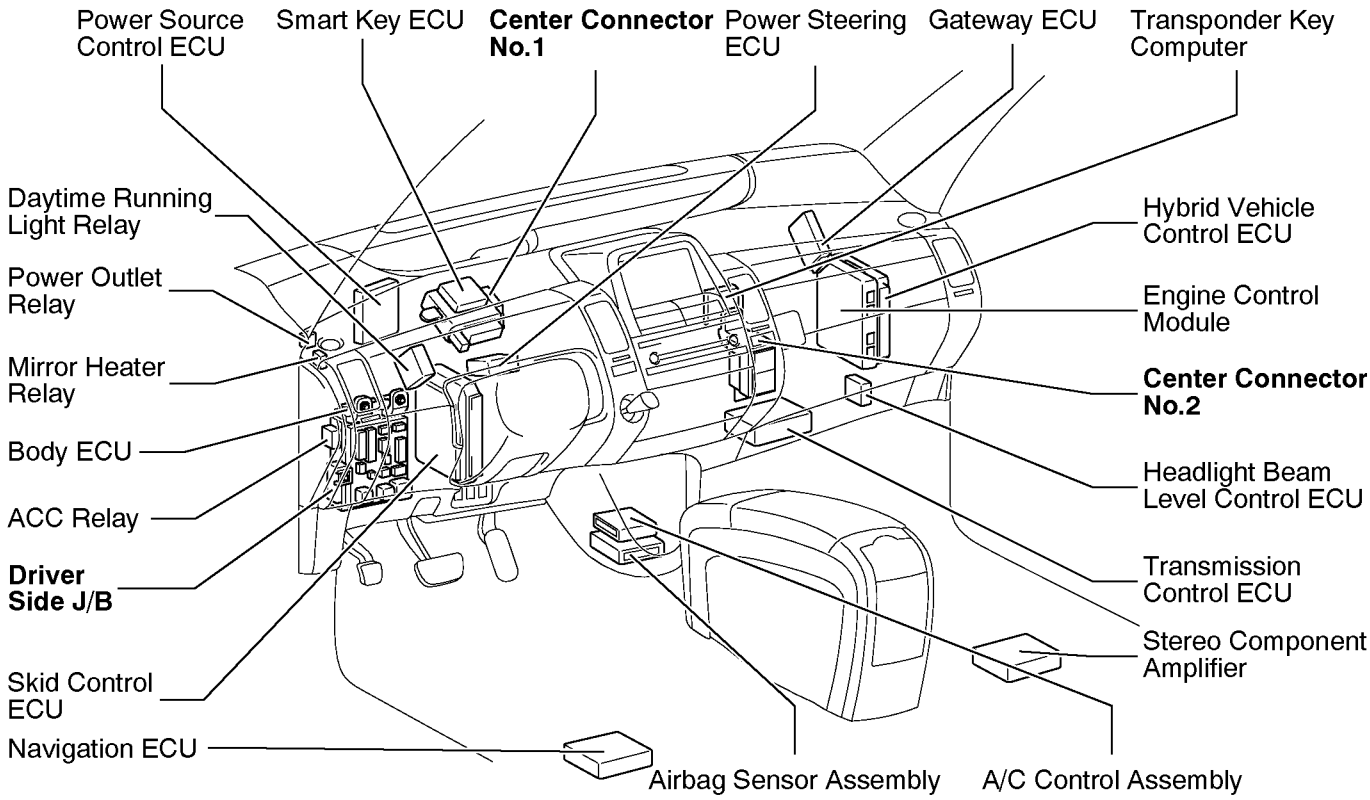

[Body]

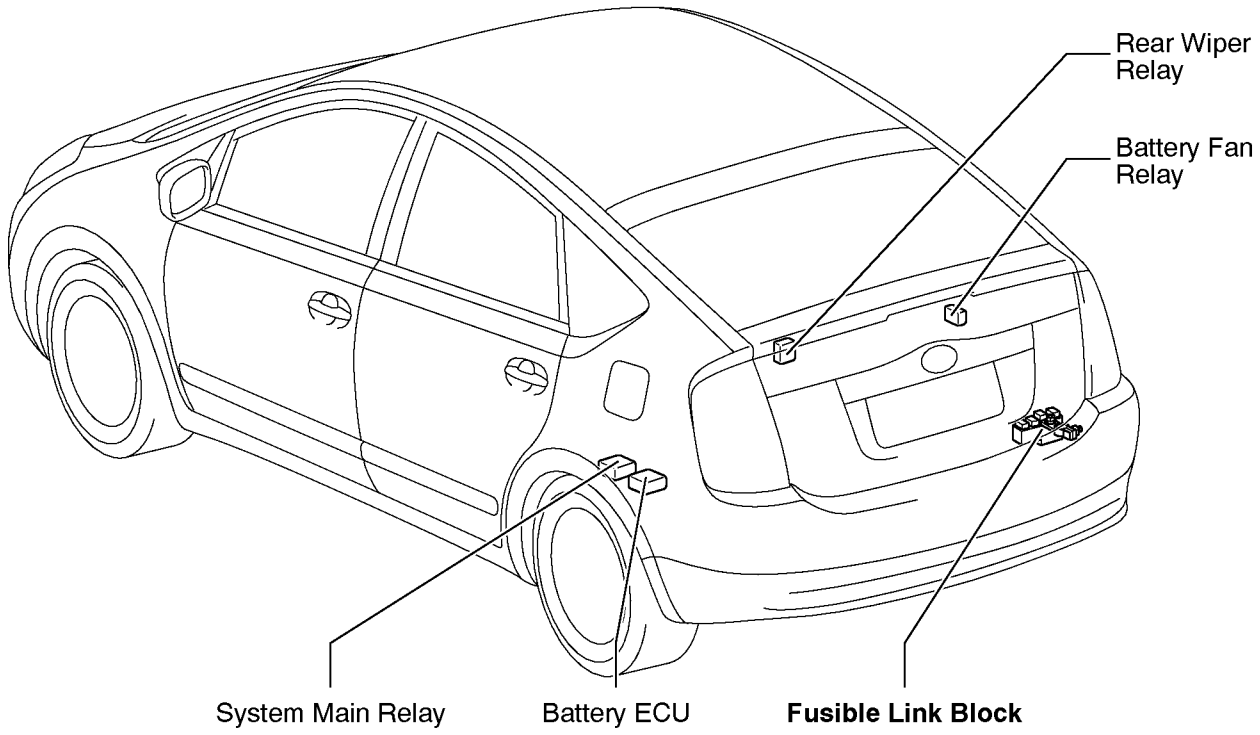
Rear Wiper Relay
Battery Fan Relay
System Main Relay
Battery ECU
Fusible Link Block

F RELAY LOCATIONS

(3) : Engine Room R/B : Engine Room J/B	Engine Compartment Left (See Page 20)

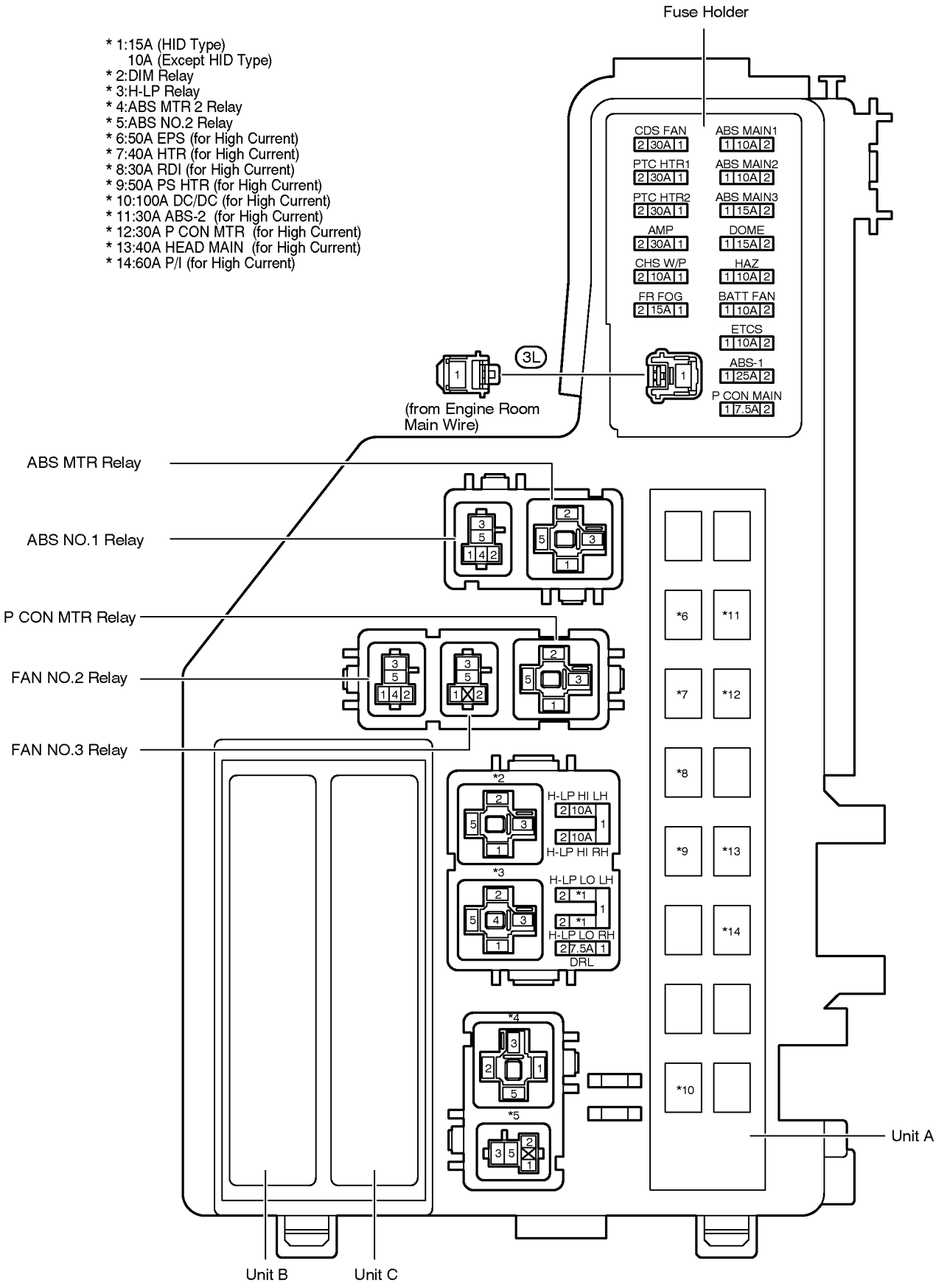

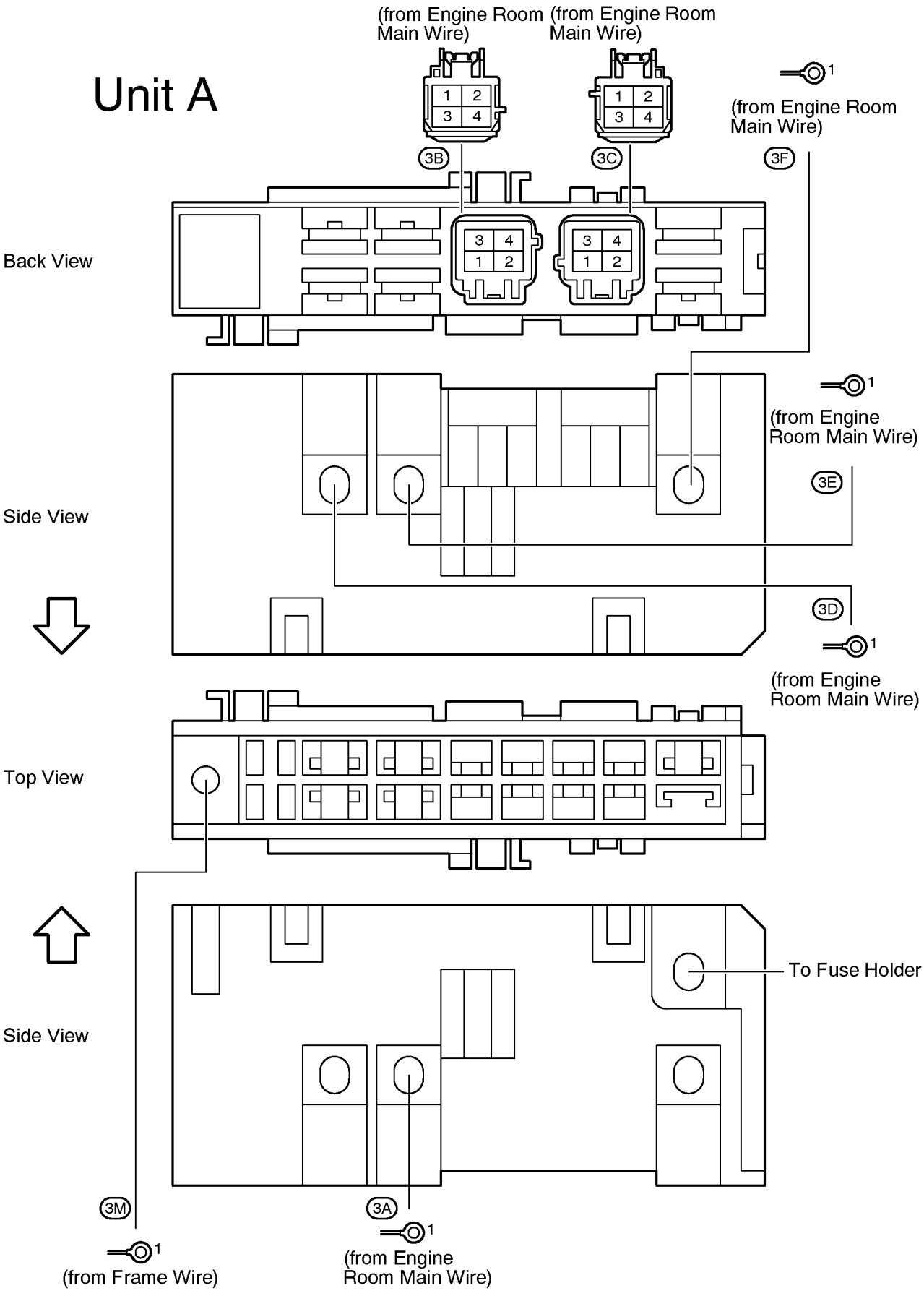
Unit A
(from Engine Room Main Wire)
(from Engine Room Main Wire)
(from Engine Room Main Wire)
3B
3C
3F
Back View
(from Engine Room Main Wire)
3E
Side View
3D
(from Engine Room Main Wire)
Top View
To Fuse Holder
Side View
3M
3A
(from Frame Wire)
(from Engine Room Main Wire)

F RELAY LOCATIONS

③ : Engine Room R/B ⬭ : Engine Room J/B	Engine Compartment Left (See Page 20)

Unit B

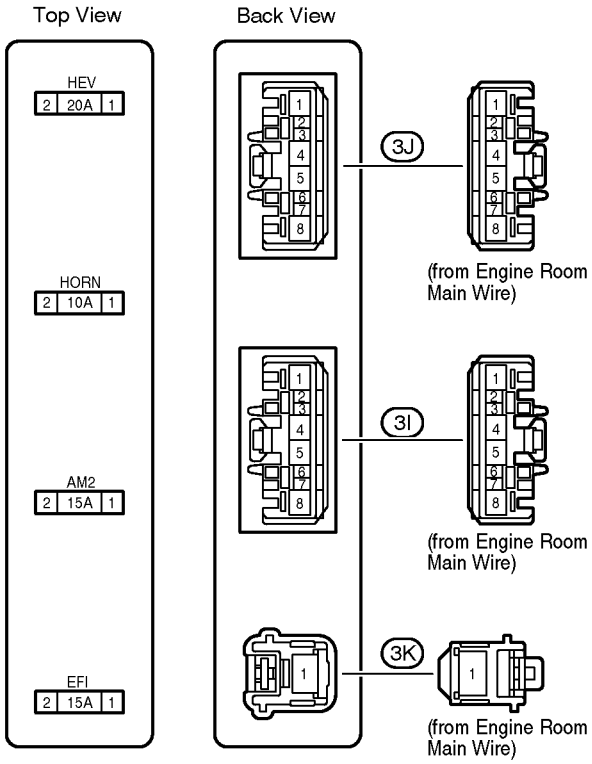

Unit C

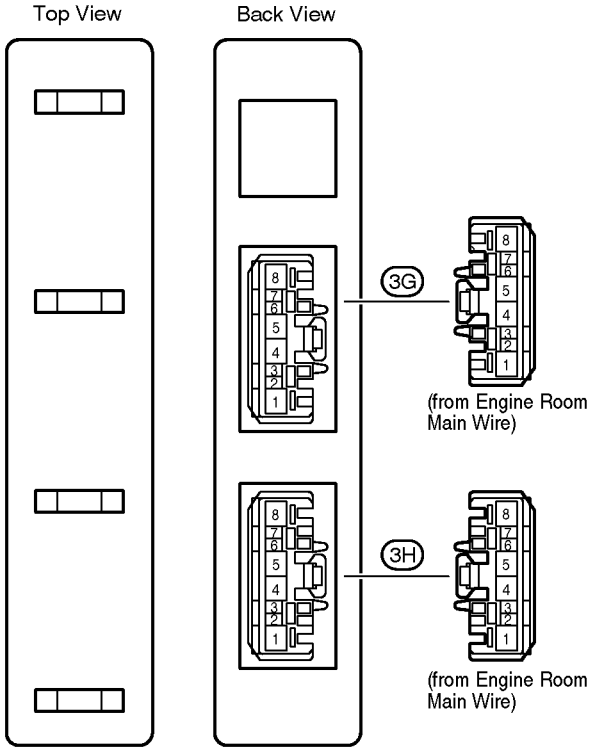

[Engine Room R/B and Engine Room J/B Inner Circuit]

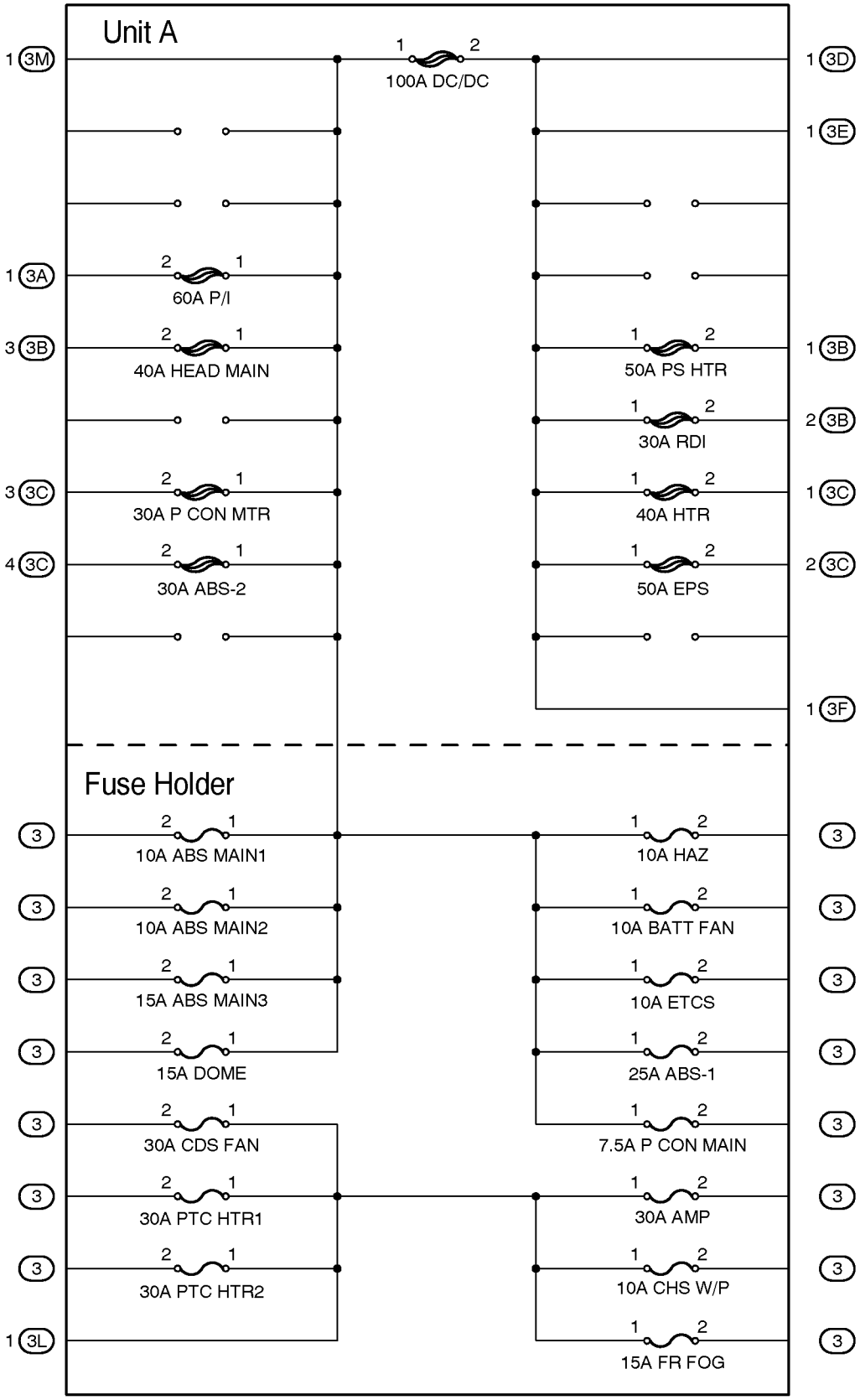

[Engine Room R/B and Engine Room J/B Inner Circuit]

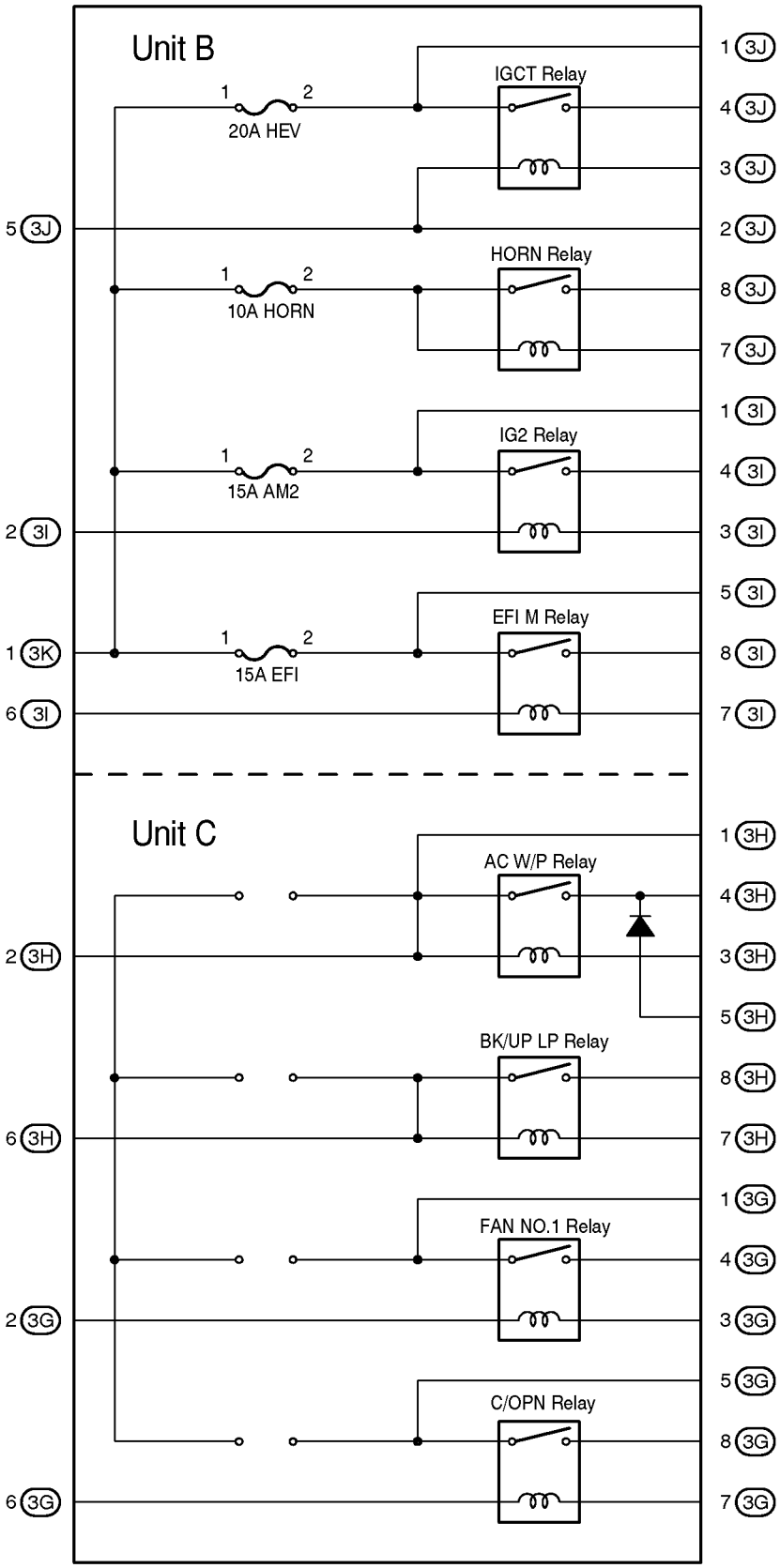

② : Engine Room R/B No.2	Right Side of Reserve Tank (See Page 20)

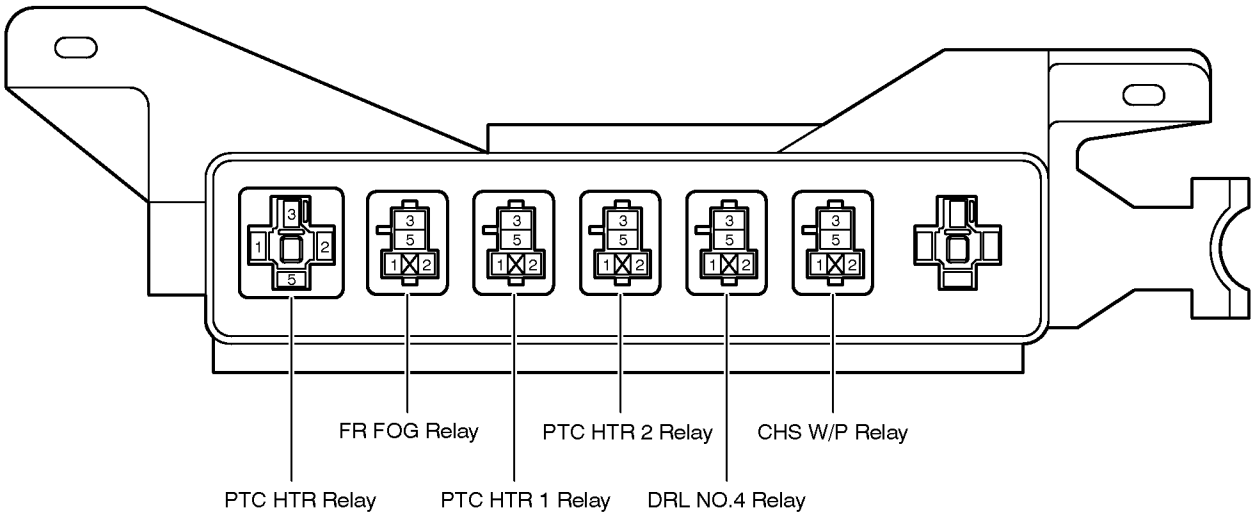

Fusible Link Block	Luggage Room Right (See Page 21)

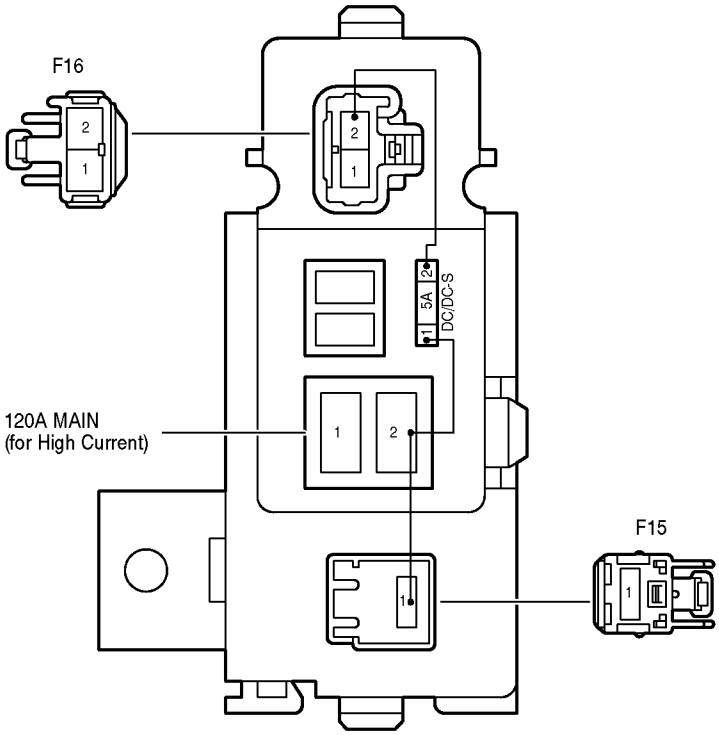

F RELAY LOCATIONS

: Driver Side J/B	Lower Finish Panel (See Page 20)

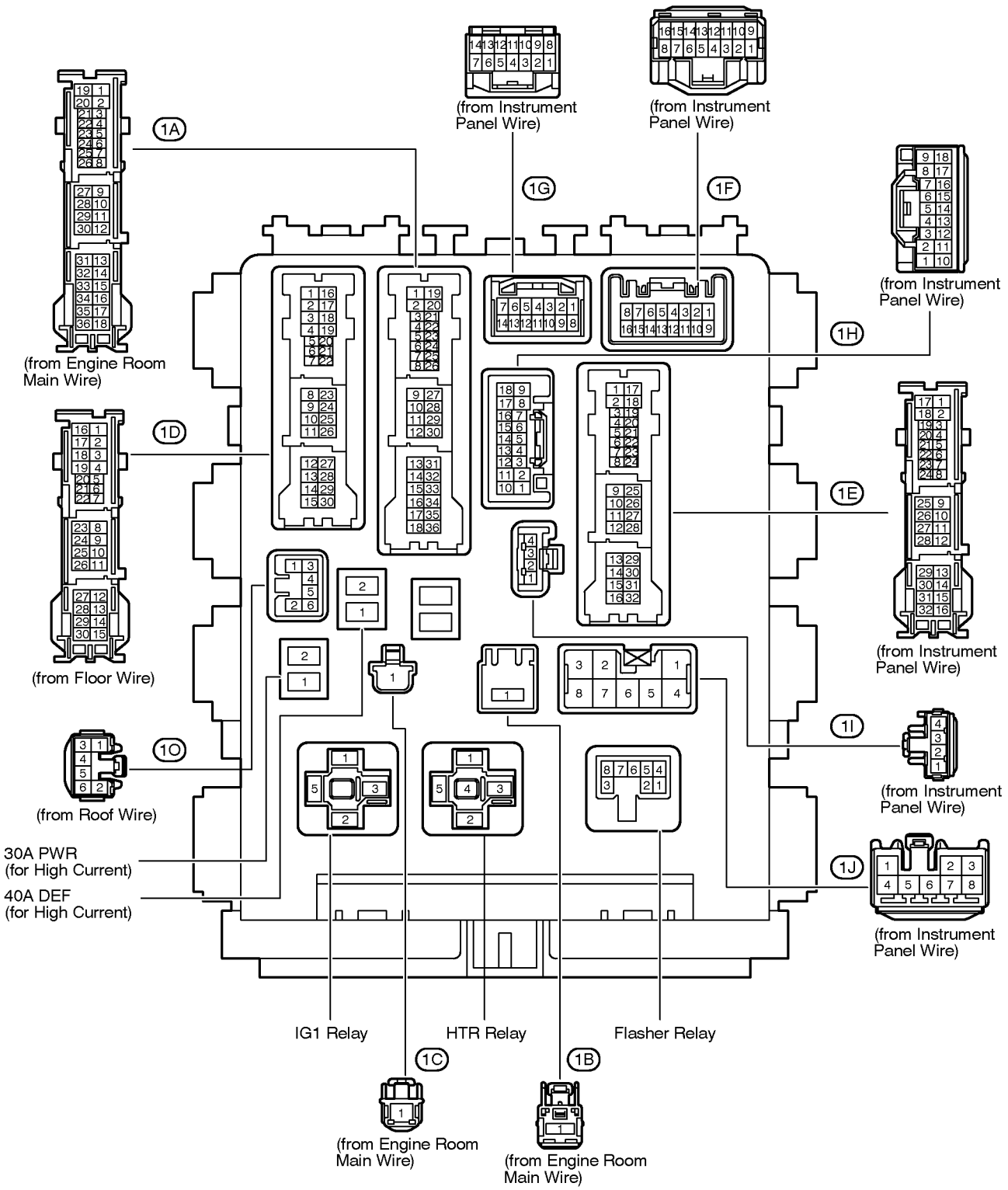

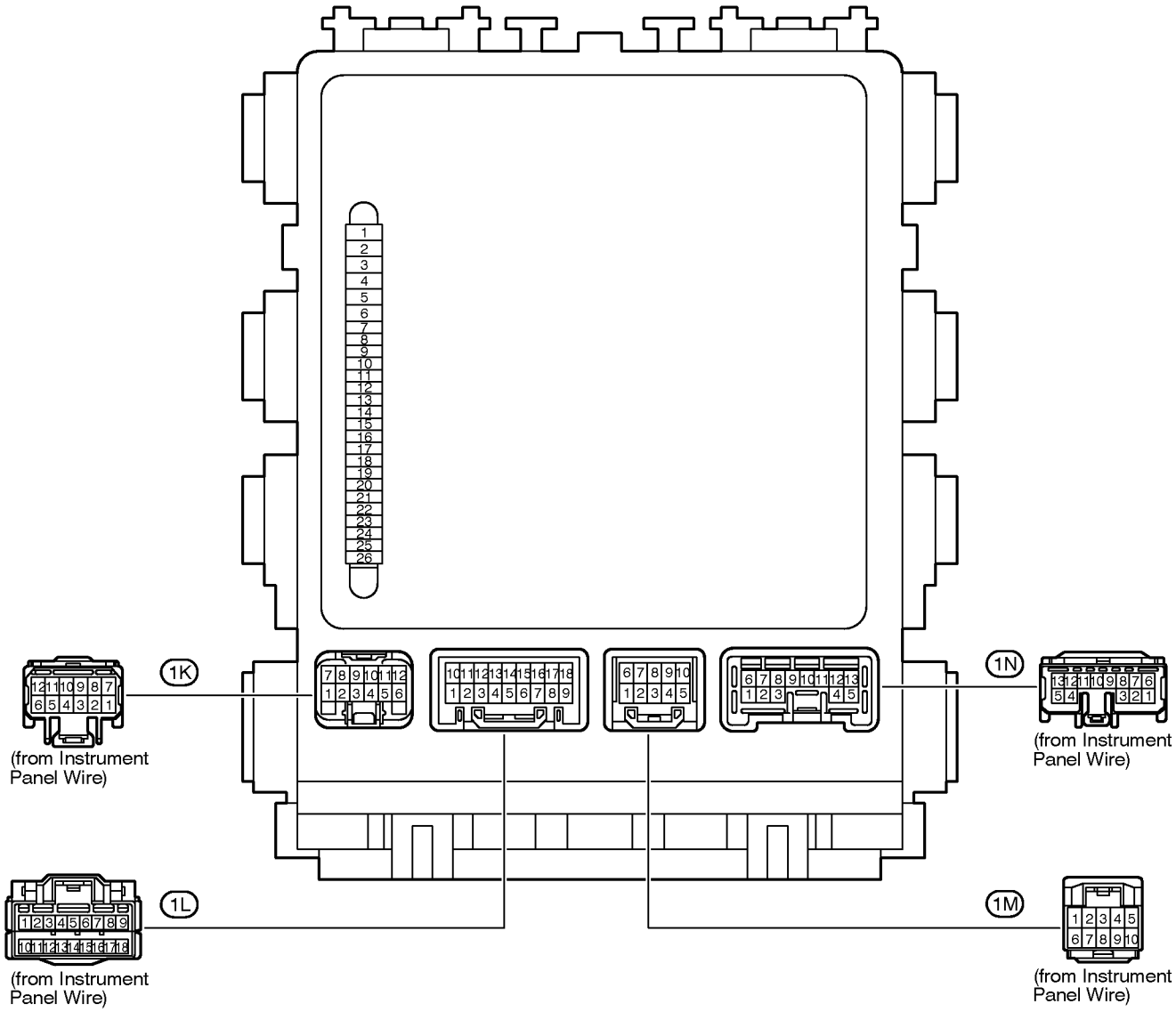
1K
(from Instrument Panel Wire)
1N
(from Instrument Panel Wire)
1L
(from Instrument Panel Wire)
1M
(from Instrument Panel Wire)

F RELAY LOCATIONS

: Driver Side J/B	Lower Finish Panel (See Page 20)

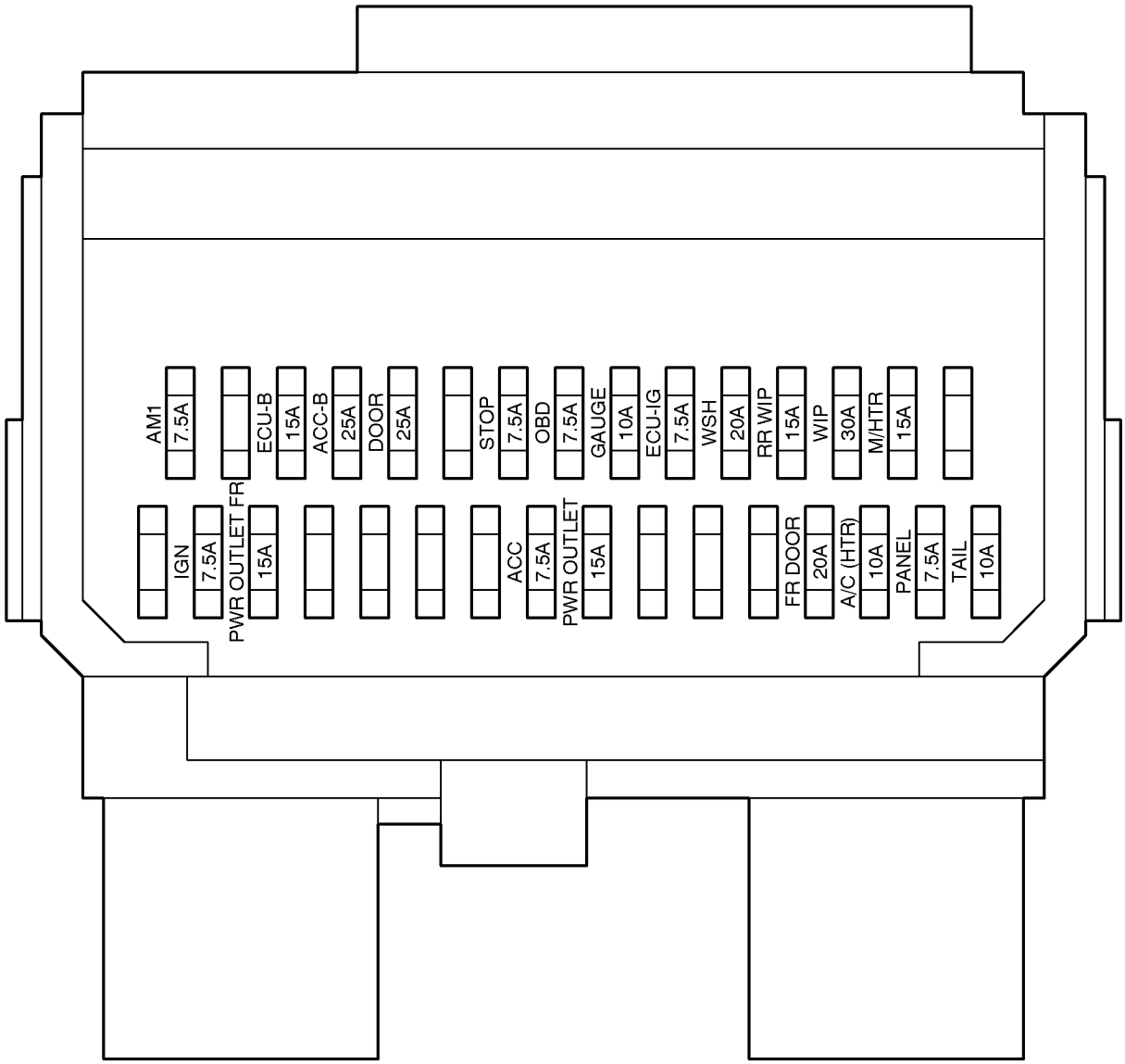

[Driver Side J/B Inner Circuit]

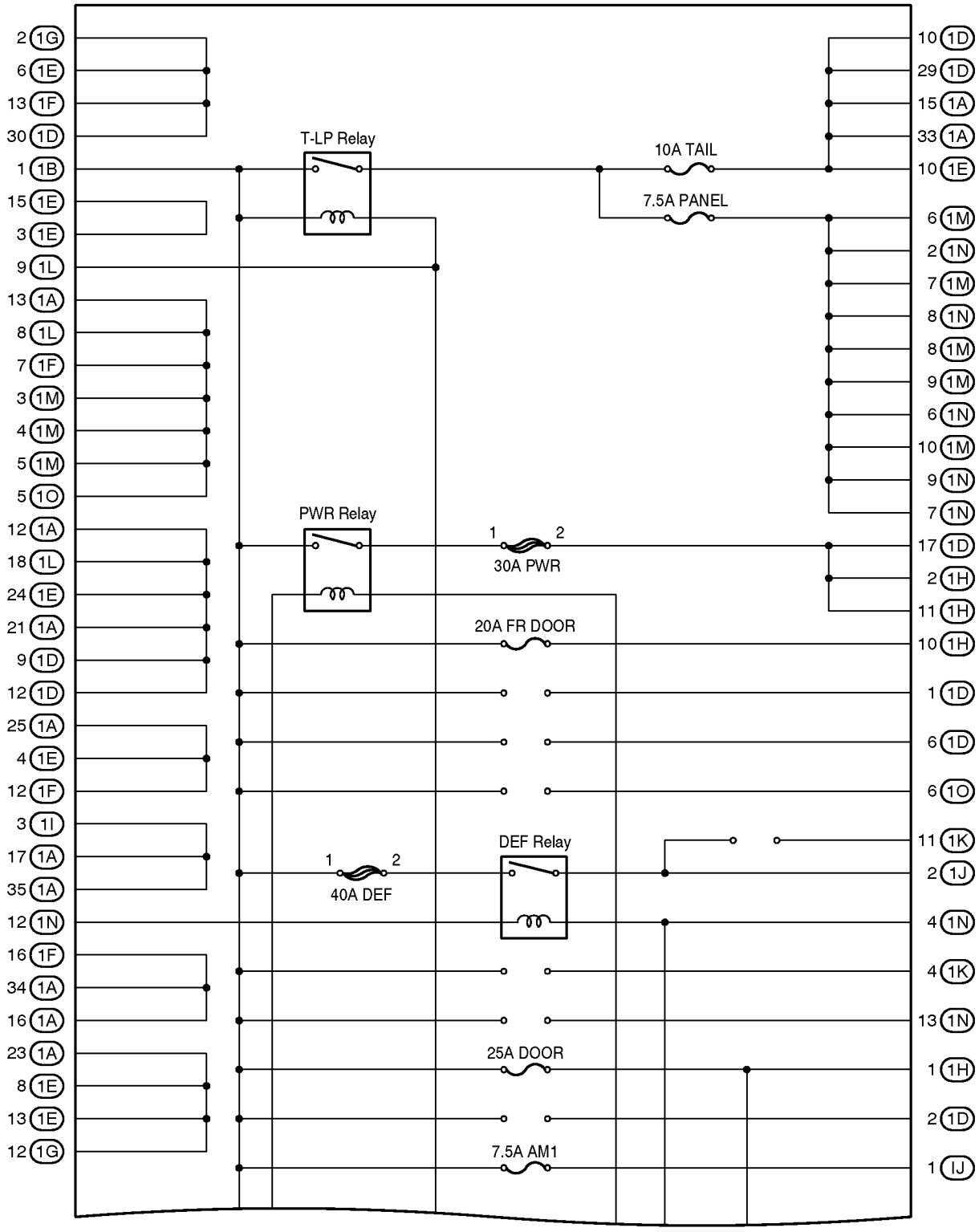

(Cont. Next Page)

(Cont'd)

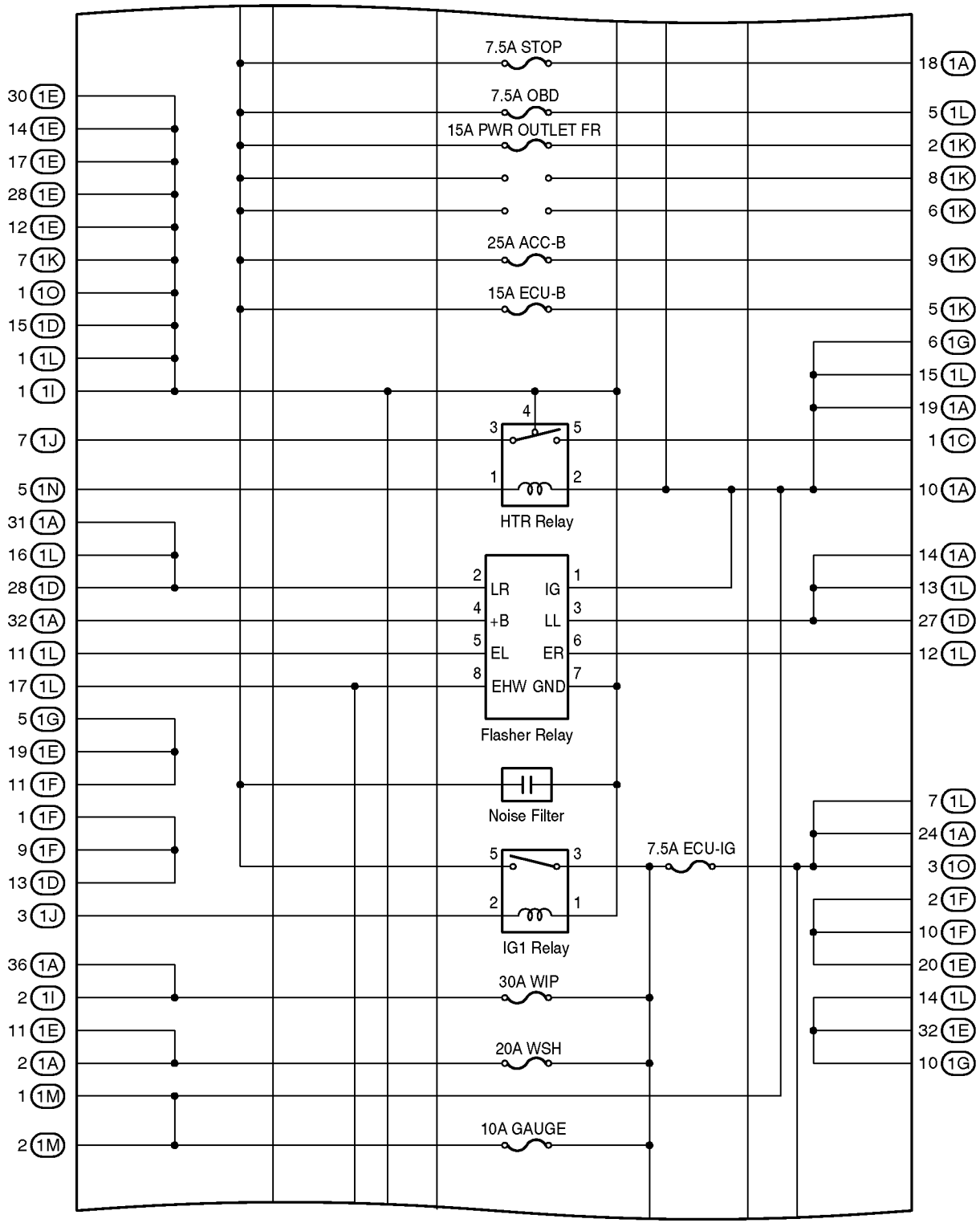

(Cont. Next Page)

[Driver Side J/B Inner Circuit]

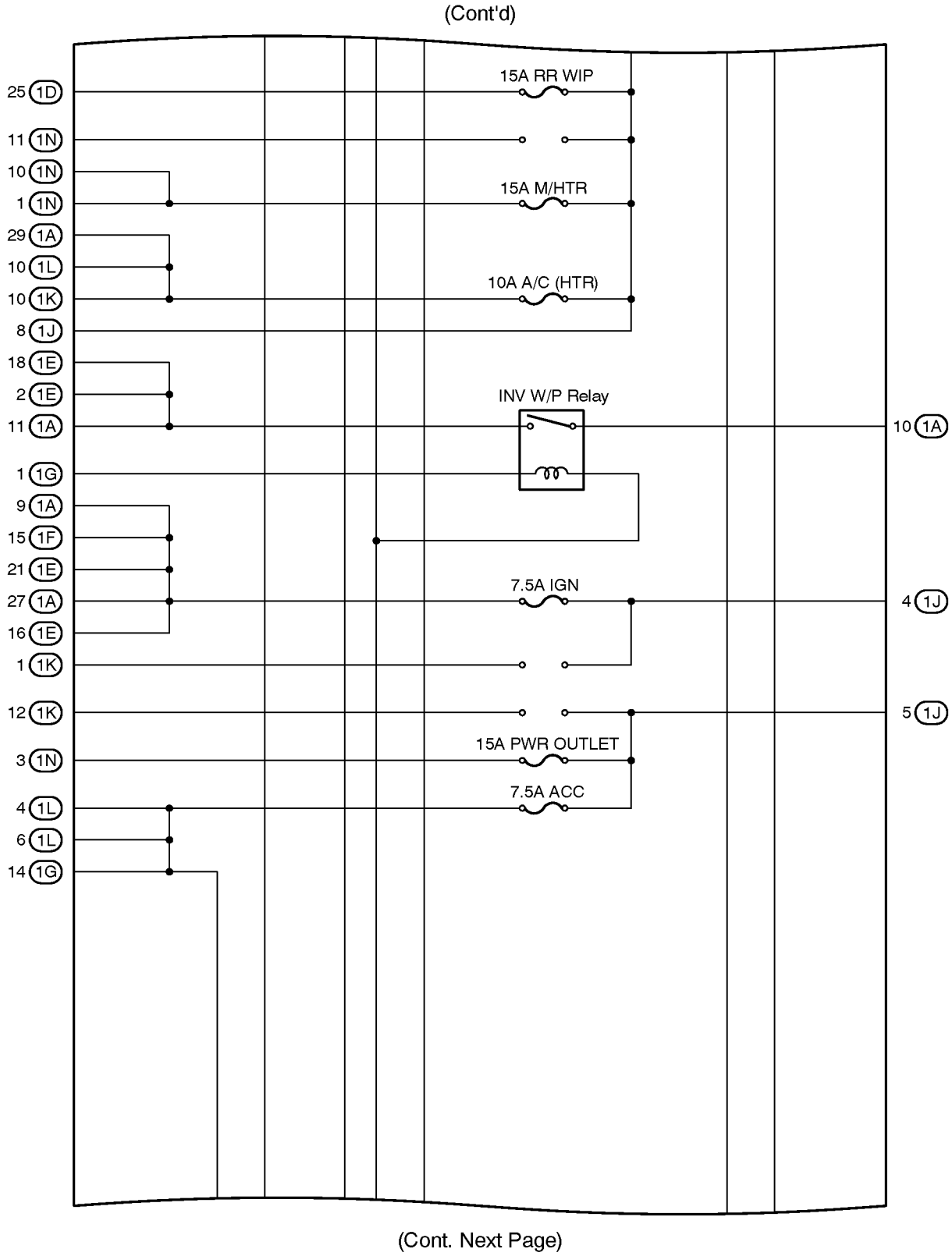

(Cont'd)

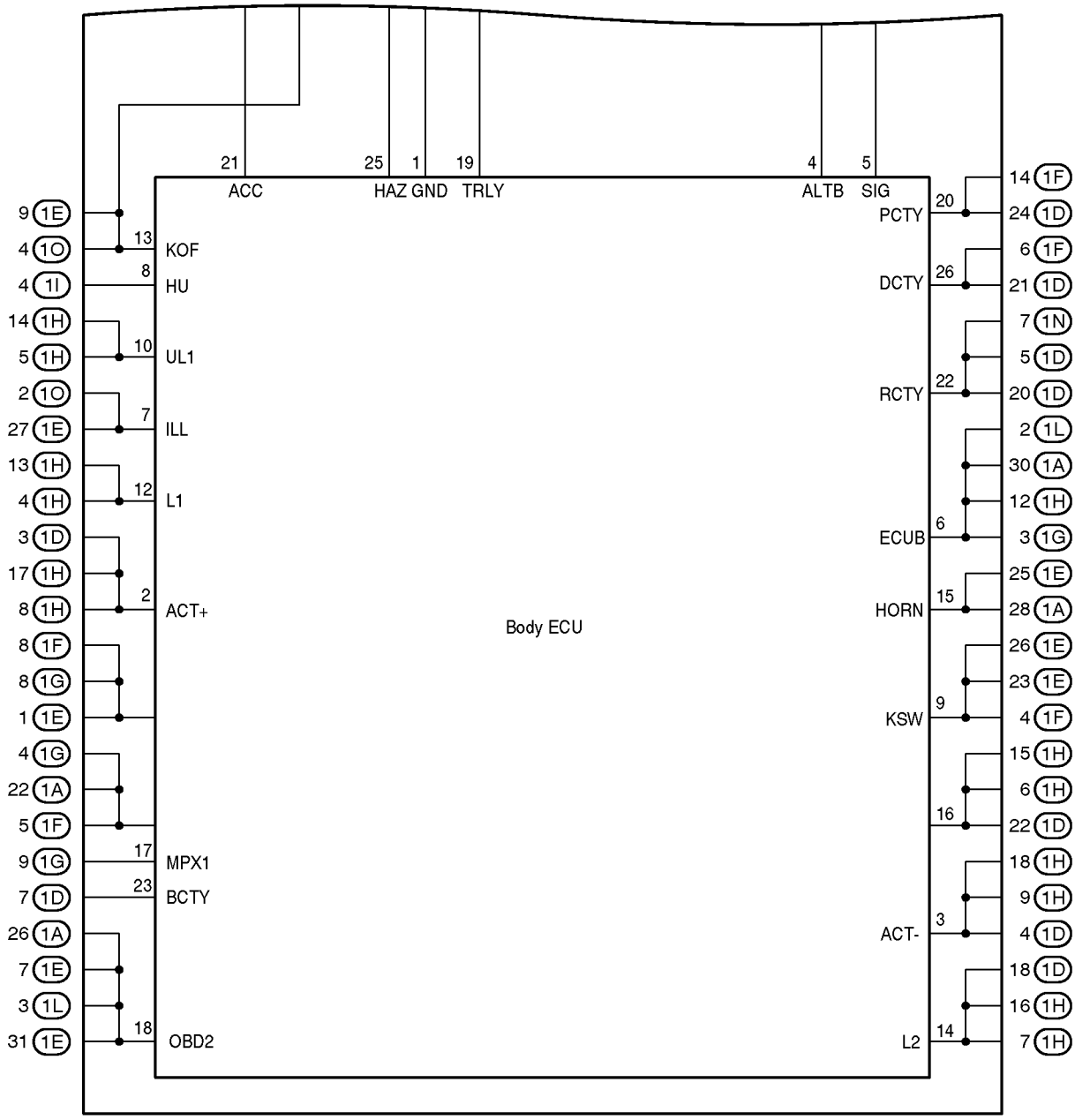
21
ACC
25
HAZ
1
GND
19
TRLY
4
ALTB
5
SIG
Body ECU
13
KOF
8
HU
10
UL1
7
ILL
12
L1
2
ACT+
17
MPX1
23
BCTY
18
OBD2
20
PCTY
26
DCTY
22
RCTY
6
ECUB
15
HORN
9
KSW
16
3
ACT-
14
L2
9 1E
4 1O
4 1I
14 1H
5 1H
2 1O
27 1E
13 1H
4 1H
3 1D
17 1H
8 1H
8 1F
8 1G
1 1E
4 1G
22 1A
5 1F
9 1G
7 1D
26 1A
7 1E
3 1L
31 1E
14 1F
24 1D
6 1F
21 1D
7 1N
5 1D
20 1D
2 1L
30 1A
12 1H
3 1G
25 1E
28 1A
26 1E
23 1E
4 1F
15 1H
6 1H
22 1D
18 1H
9 1H
4 1D
18 1D
16 1H
7 1H

F RELAY LOCATIONS

: Center Connector No.1	Behind the Combination Meter (See Page 20)

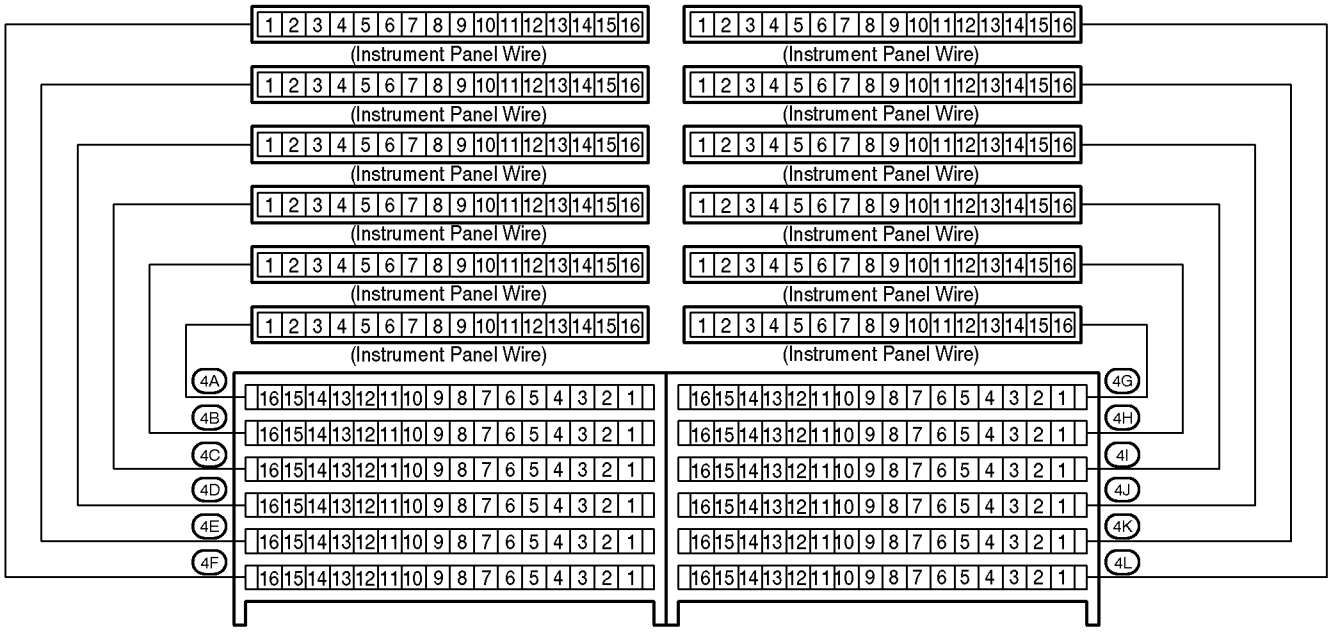

[Center Connector No.1 Inner Circuit]

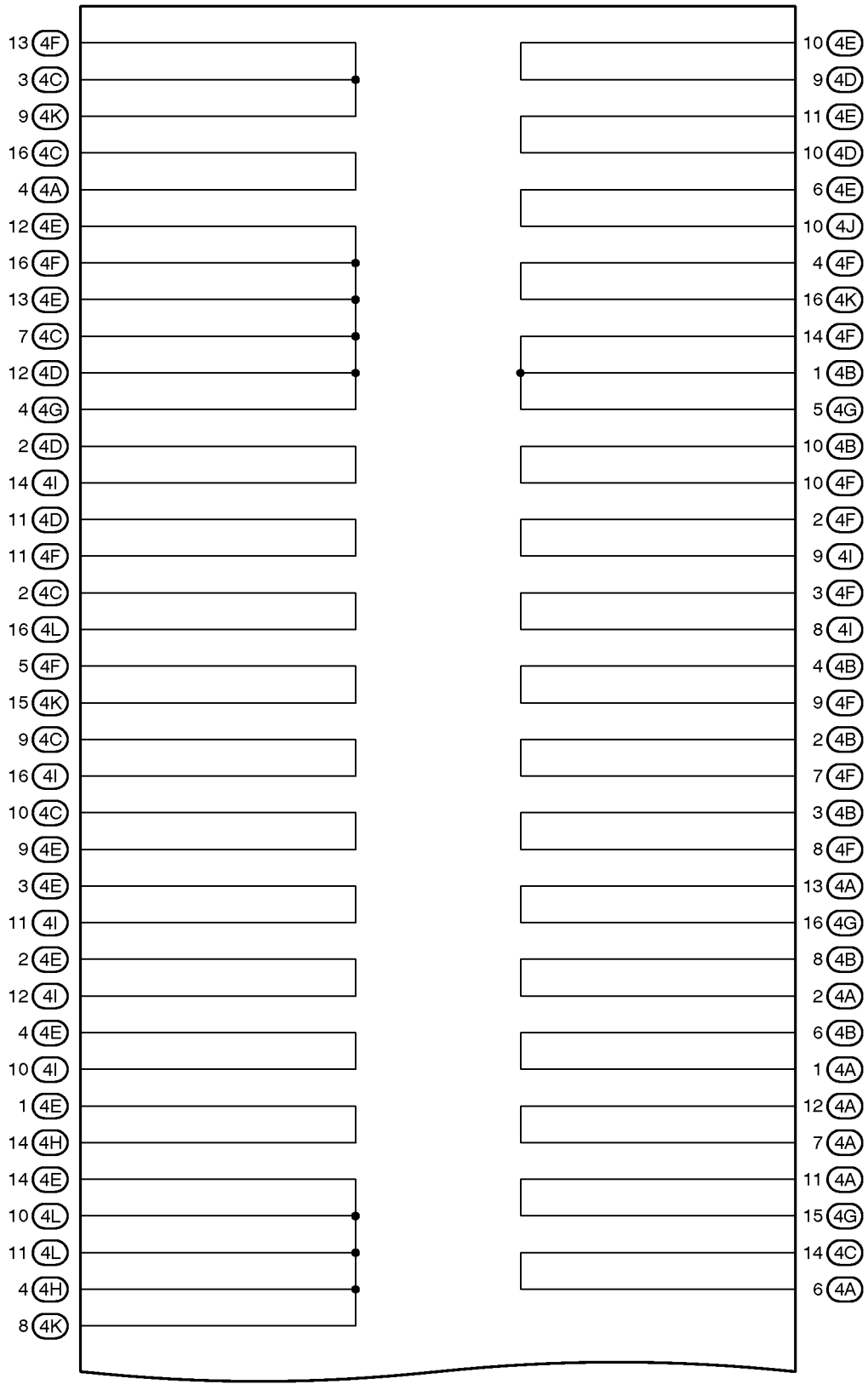

(Cont. Next Page)

(Cont'd)

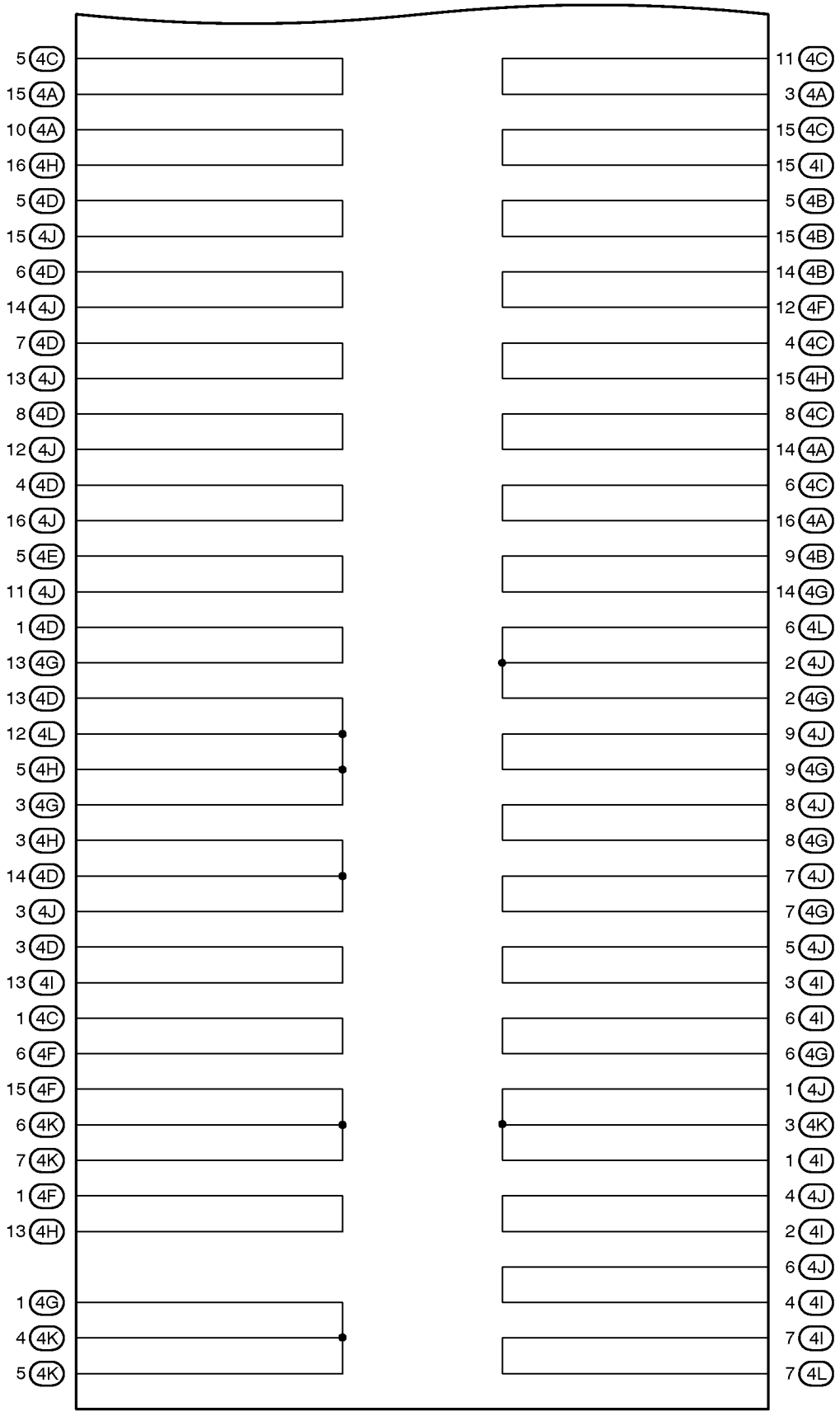
5 4C
15 4A
10 4A
16 4H
5 4D
15 4J
6 4D
14 4J
7 4D
13 4J
8 4D
12 4J
4 4D
16 4J
5 4E
11 4J
1 4D
13 4G
13 4D
12 4L
5 4H
3 4G
3 4H
14 4D
3 4J
3 4D
13 4I
1 4C
6 4F
15 4F
6 4K
7 4K
1 4F
13 4H
1 4G
4 4K
5 4K
11 4C
3 4A
15 4C
15 4I
5 4B
15 4B
14 4B
12 4F
4 4C
15 4H
8 4C
14 4A
6 4C
16 4A
9 4B
14 4G
6 4L
2 4J
2 4G
9 4J
9 4G
8 4J
8 4G
7 4J
7 4G
5 4J
3 4I
6 4I
6 4G
1 4J
3 4K
1 4I
4 4J
2 4I
6 4J
4 4I
7 4I
7 4L

F RELAY LOCATIONS

: Center Connector No.2	Instrument Panel Brace RH (See Page 20)

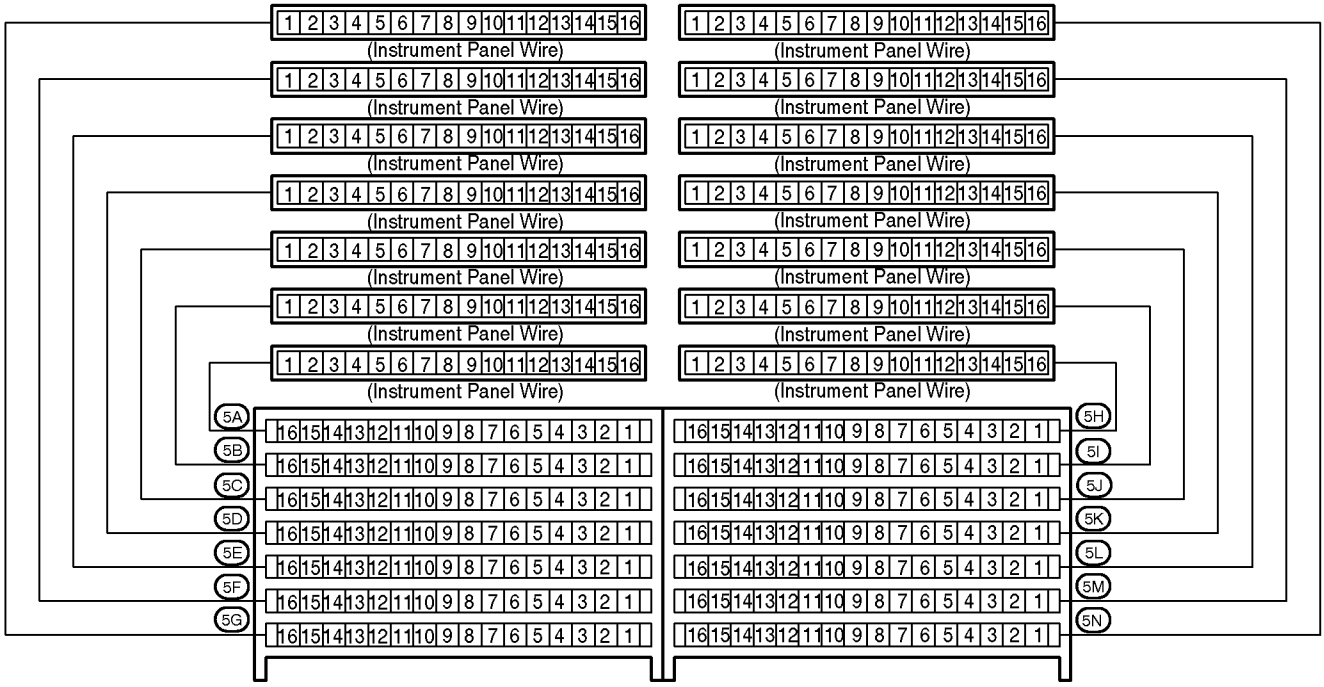

[Center Connector No.2 Inner Circuit]

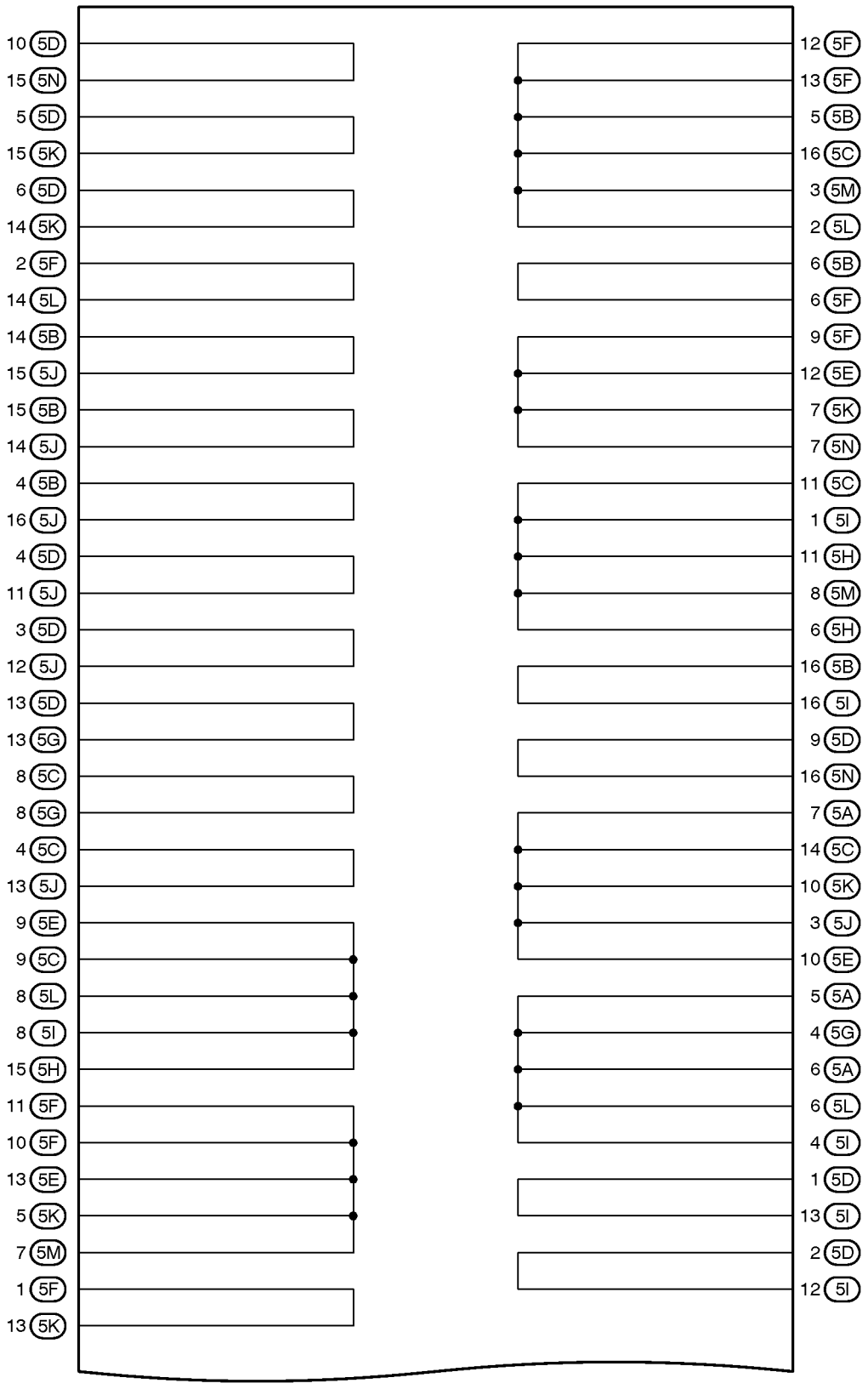

(Cont. Next Page)

[Center Connector No.2 Inner Circuit]

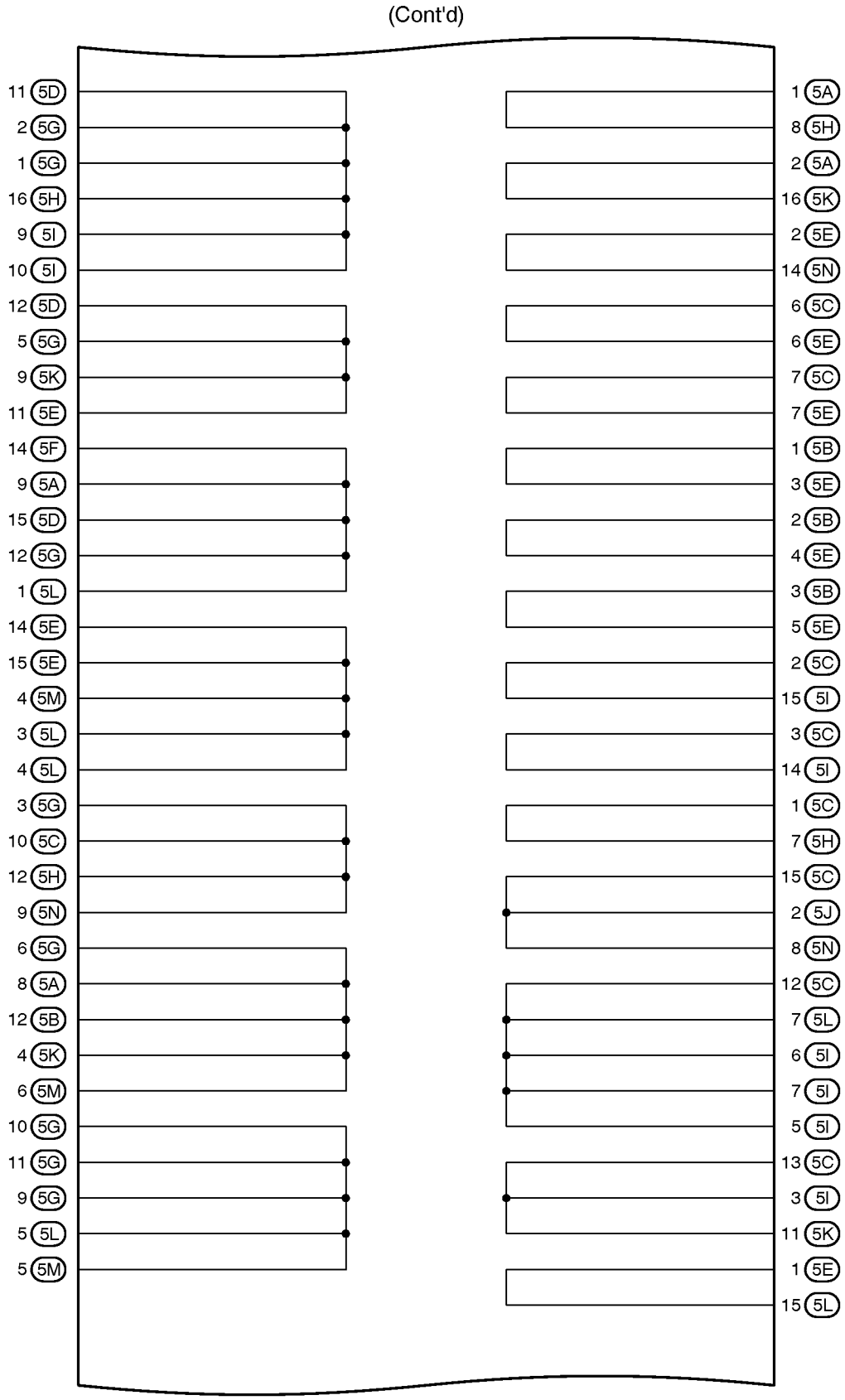

(Cont. Next Page)

(Cont'd)

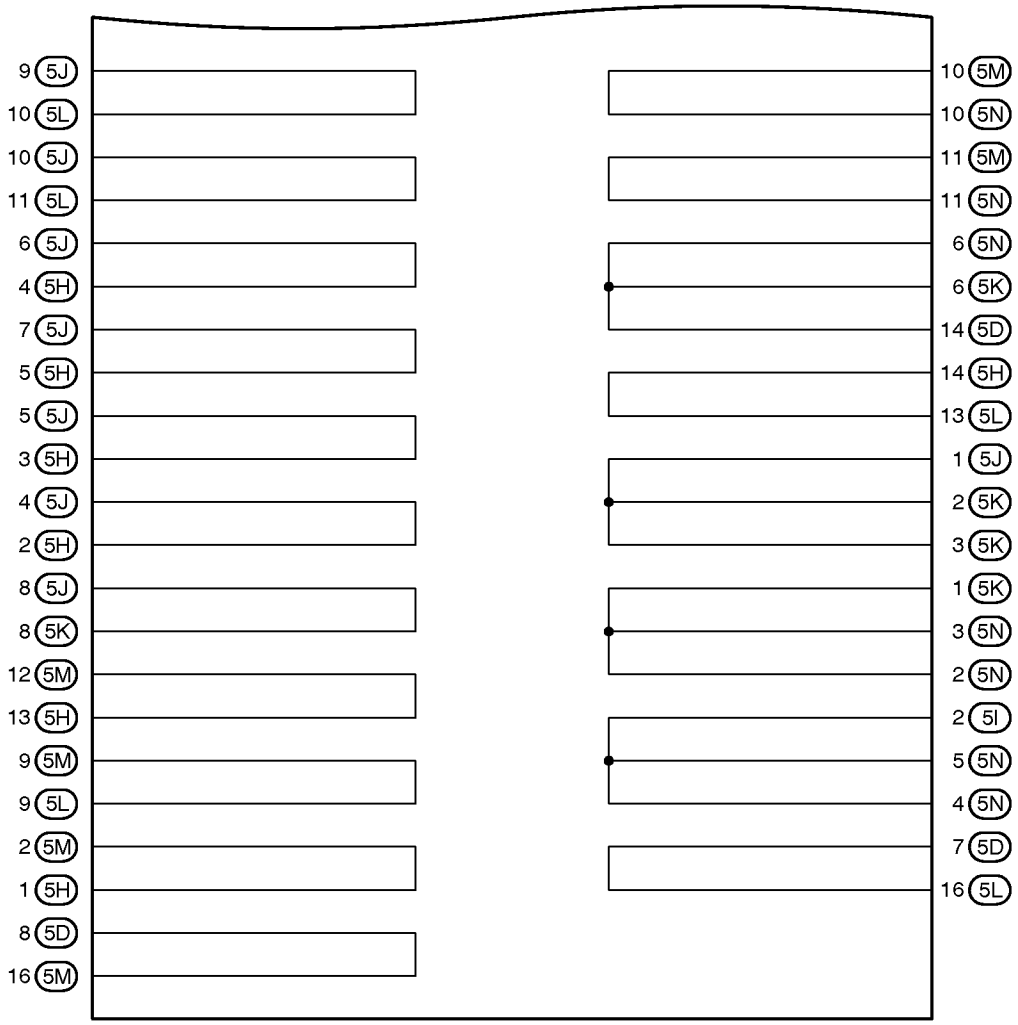
9 5J
10 5L
10 5J
11 5L
6 5J
4 5H
7 5J
5 5H
5 5J
3 5H
4 5J
2 5H
8 5J
8 5K
12 5M
13 5H
9 5M
9 5L
2 5M
1 5H
8 5D
16 5M
10 5M
10 5N
11 5M
11 5N
6 5N
6 5K
14 5D
14 5H
13 5L
1 5J
2 5K
3 5K
1 5K
3 5N
2 5N
2 5I
5 5N
4 5N
7 5D
16 5L

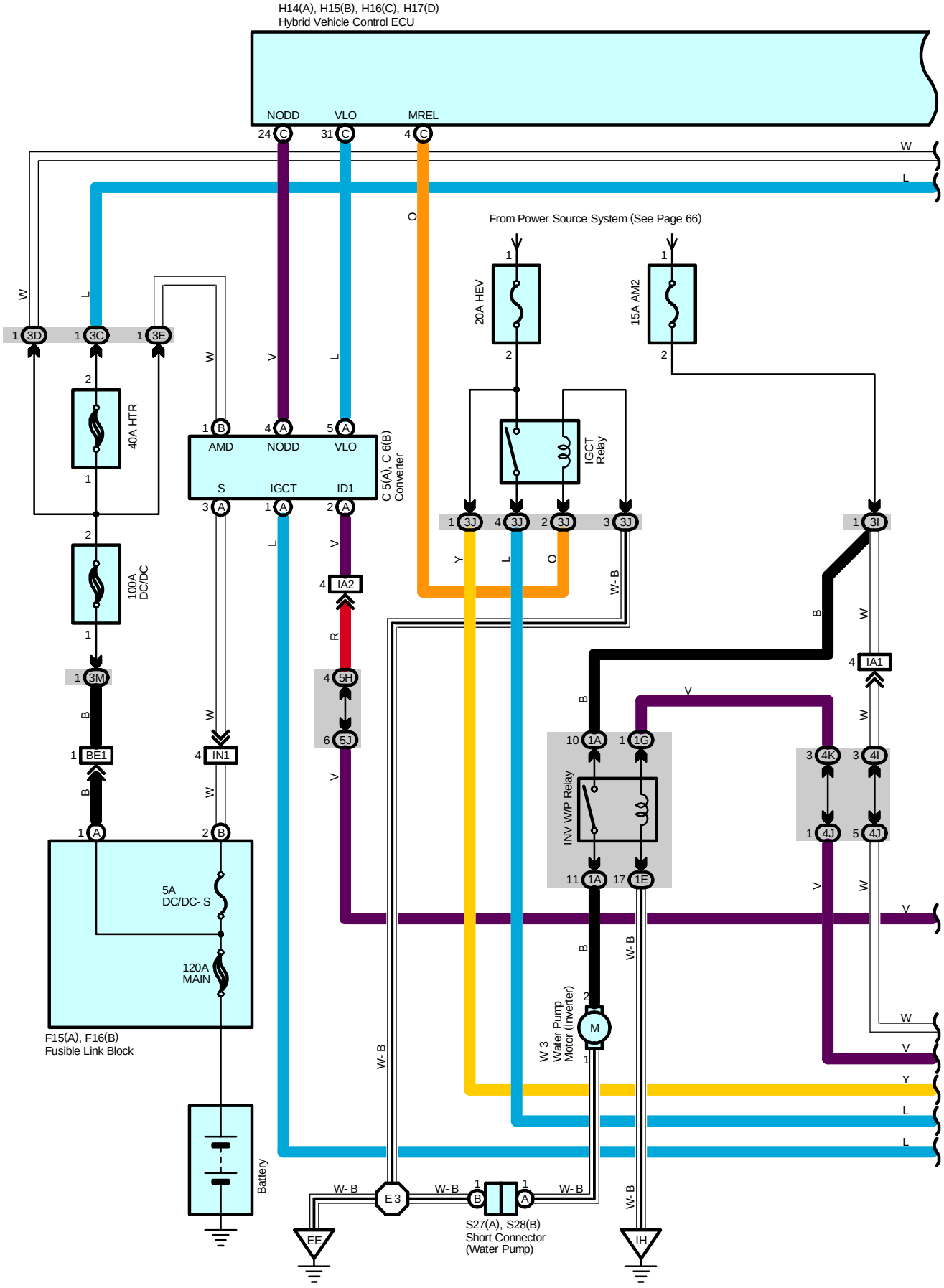
H14(A), H15(B), H16(C), H17(D)
Hybrid Vehicle Control ECU
NODD
VLO
MREL
24 C
31 C
4 C
From Power Source System (See Page 66)
20A HEV
15A AM2
IGCT Relay
40A HTR
100A DC/DC
AMD
NODD
VLO
S
IGCT
ID1
C 5(A), C 6(B) Converter
IA2
IA1
INV W/P Relay
5A DC/DC- S
120A MAIN
F15(A), F16(B) Fusible Link Block
Battery
W 3 Water Pump Motor (Inverter)
E 3
EE
IH
S27(A), S28(B) Short Connector (Water Pump)

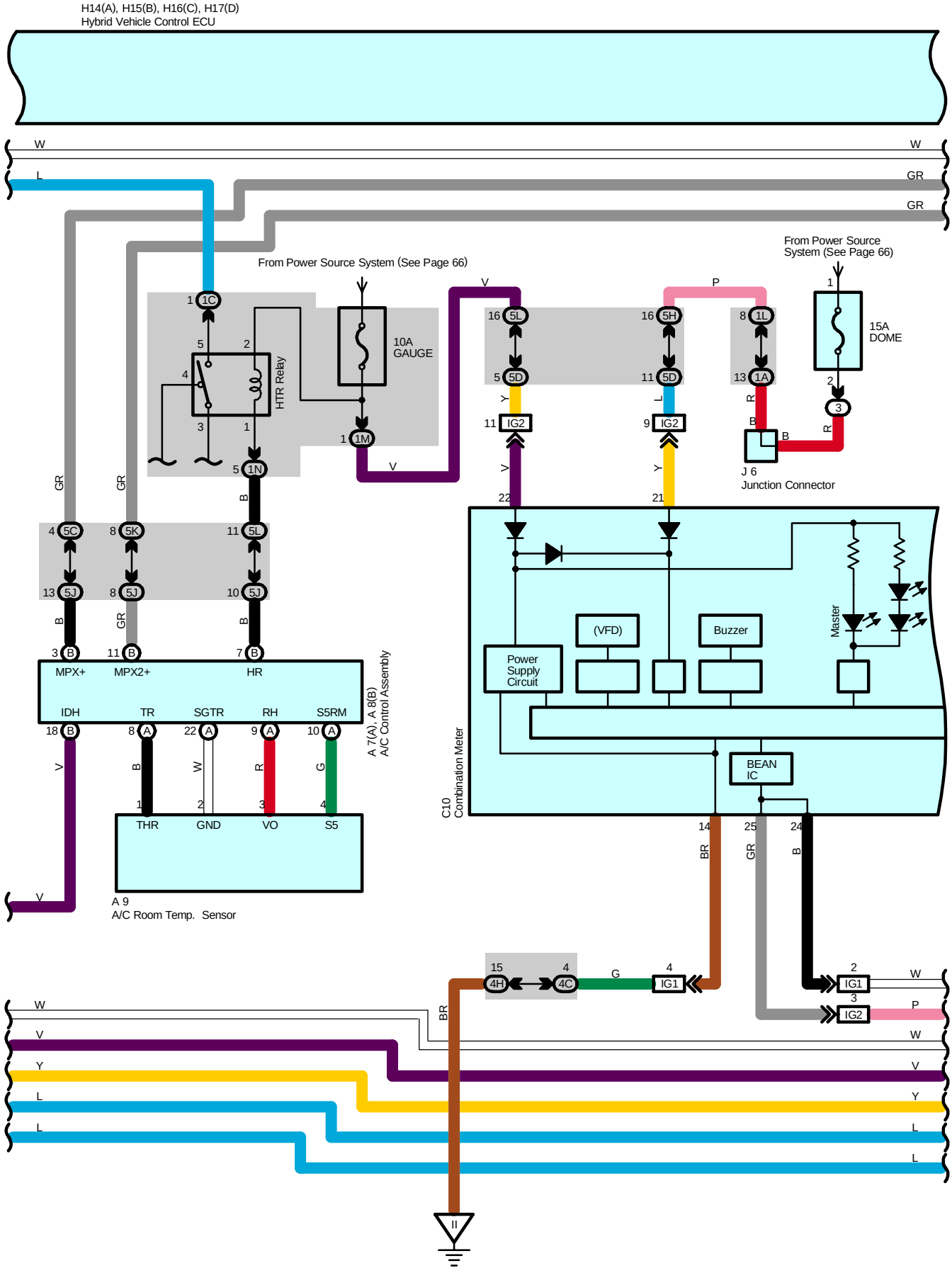
H14(A), H15(B), H16(C), H17(D)
Hybrid Vehicle Control ECU
From Power Source System (See Page 66)
From Power Source System (See Page 66)
10A GAUGE
HTR Relay
15A DOME
J 6
Junction Connector
MPX+
MPX2+
HR
IDH
TR
SGTR
RH
S5RM
A 7(A), A 8(B)
A/C Control Assembly
THR
GND
VO
S5
A 9
A/C Room Temp. Sensor
C10
Combination Meter
(VFD)
Buzzer
Master
Power Supply Circuit
BEAN IC
IG1
IG2

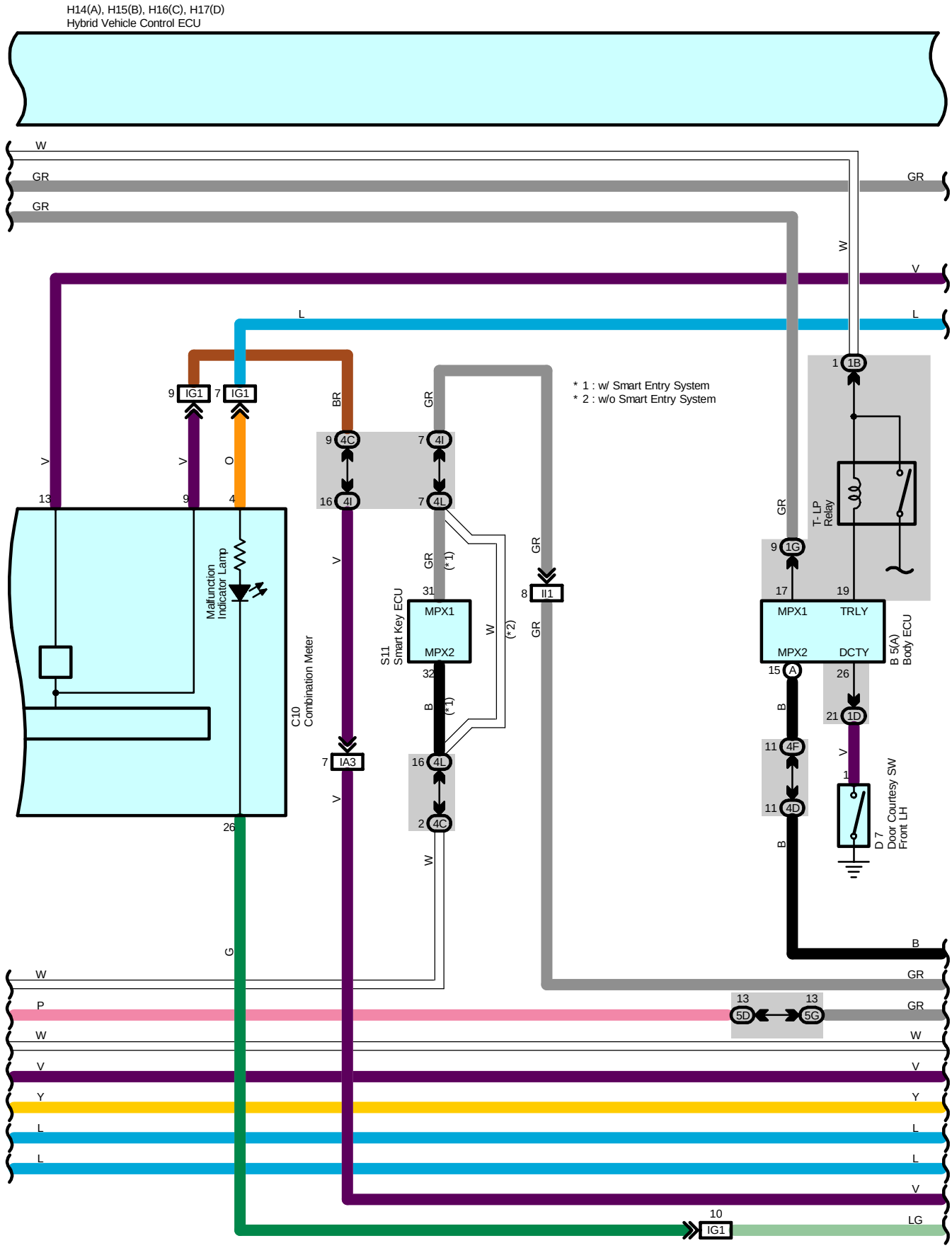
H14(A), H15(B), H16(C), H17(D)
Hybrid Vehicle Control ECU
* 1 : w/ Smart Entry System
* 2 : w/o Smart Entry System
IG1
Malfunction Indicator Lamp
C10 Combination Meter
S11 Smart Key ECU
MPX1
MPX2
TRLY
DCTY
T- LP Relay
B 5(A) Body ECU
D 7 Door Courtesy SW Front LH
IA3
II1
IG1

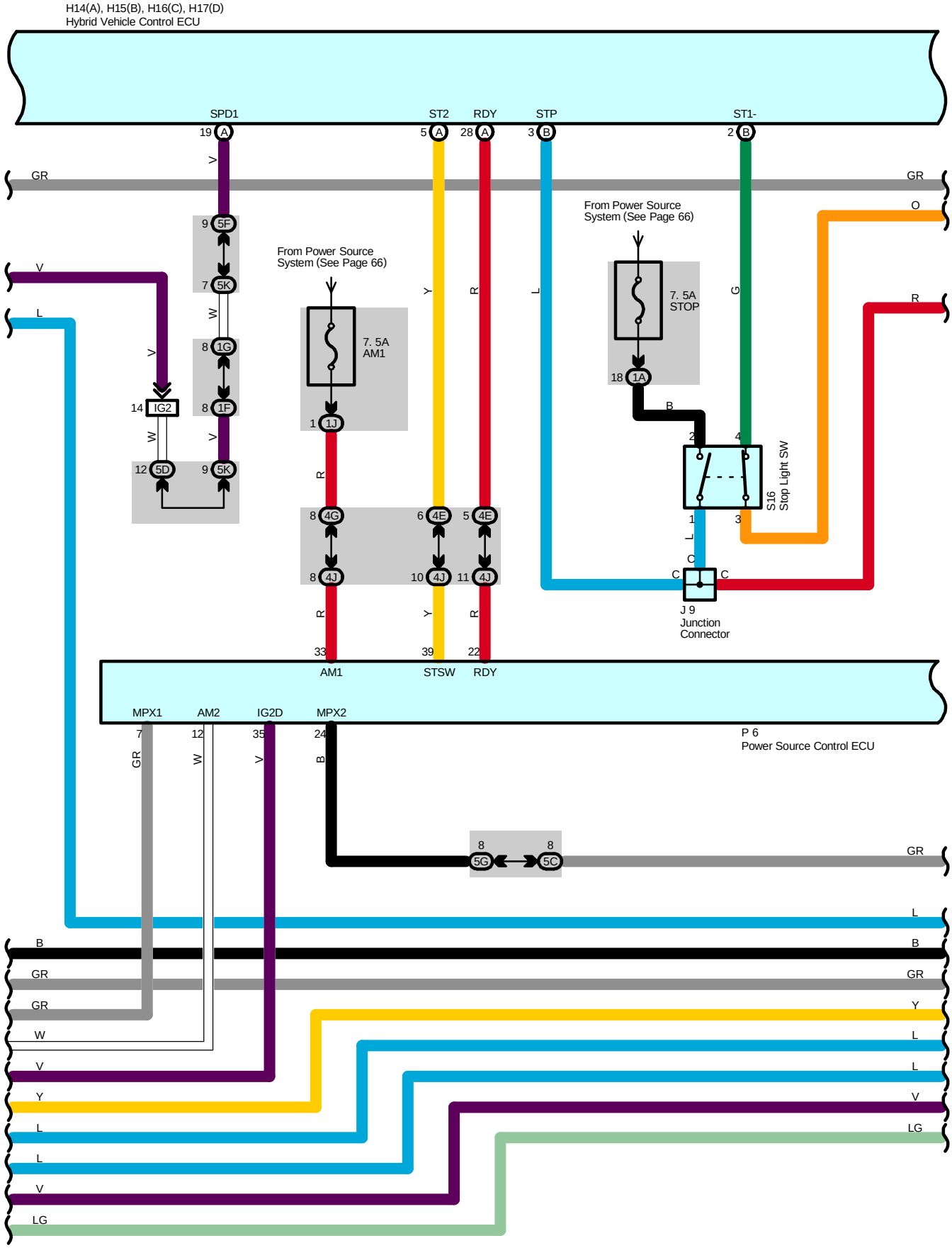
H14(A), H15(B), H16(C), H17(D)
Hybrid Vehicle Control ECU
SPD1
ST2
RDY
STP
ST1-
19 A
5 A
28 A
3 B
2 B
GR
V
9 5F
7 5K
W
8 1G
8 1F
14 IG2
12 5D
9 5K
From Power Source System (See Page 66)
7. 5A AM1
1 1J
8 4G
8 4J
33
AM1
6 4E
10 4J
39
STSW
5 4E
11 4J
22
RDY
From Power Source System (See Page 66)
7. 5A STOP
18 1A
B
2
4
1
3
S16 Stop Light SW
O
R
L
C
J 9 Junction Connector
MPX1
AM2
IG2D
MPX2
7
12
35
24
P 6 Power Source Control ECU
8 5G
8 5C
B
GR
W
V
Y
L
LG

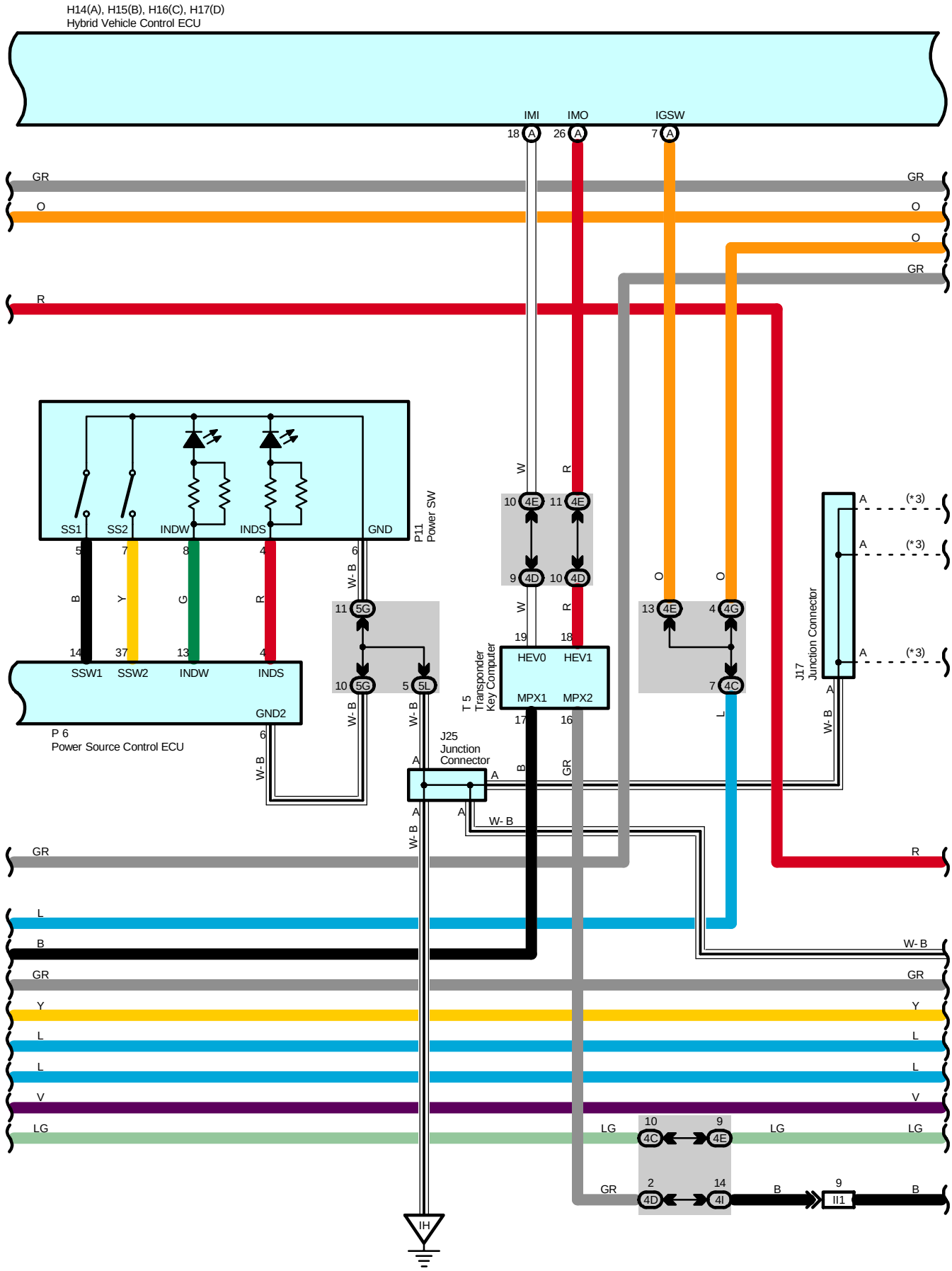
H14(A), H15(B), H16(C), H17(D)
Hybrid Vehicle Control ECU
IMI
IMO
IGSW
GR
O
R
SS1
SS2
INDW
INDS
GND
P11
Power SW
SSW1
SSW2
INDW
INDS
GND2
P 6
Power Source Control ECU
T 5
Transponder
Key Computer
HEV0
HEV1
MPX1
MPX2
J25
Junction
Connector
J17
Junction Connector
(*3)
W- B
L
B
Y
V
LG
IH
II1

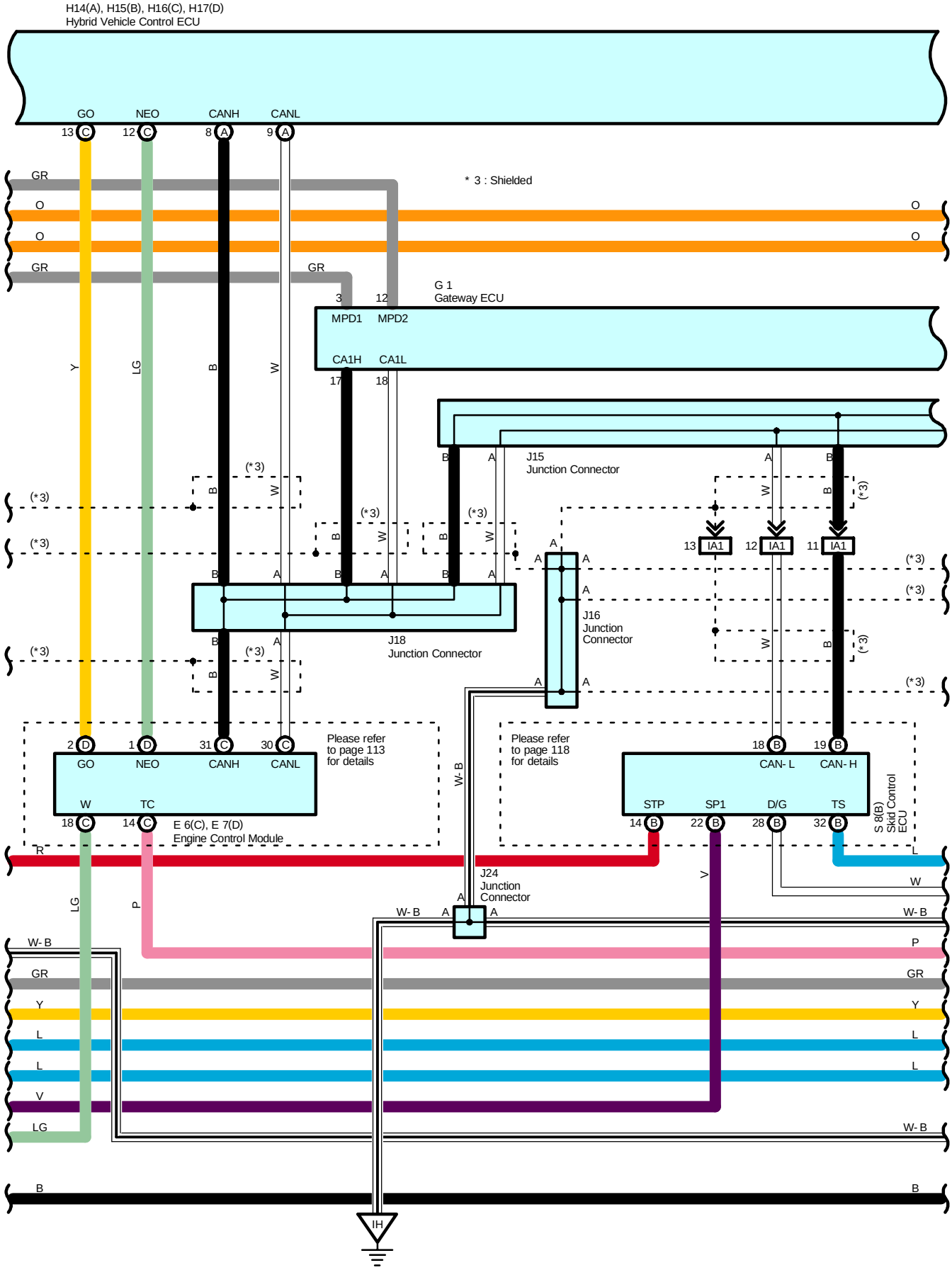
H14(A), H15(B), H16(C), H17(D)
Hybrid Vehicle Control ECU
GO
NEO
CANH
CANL
* 3 : Shielded
G 1
Gateway ECU
MPD1
MPD2
CA1H
CA1L
J15
Junction Connector
J16
Junction
Connector
J18
Junction Connector
IA1
Please refer
to page 113
for details
Please refer
to page 118
for details
W
TC
E 6(C), E 7(D)
Engine Control Module
CAN- L
CAN- H
STP
SP1
D/G
TS
S 8(B)
Skid Control
ECU
J24
Junction
Connector
IH

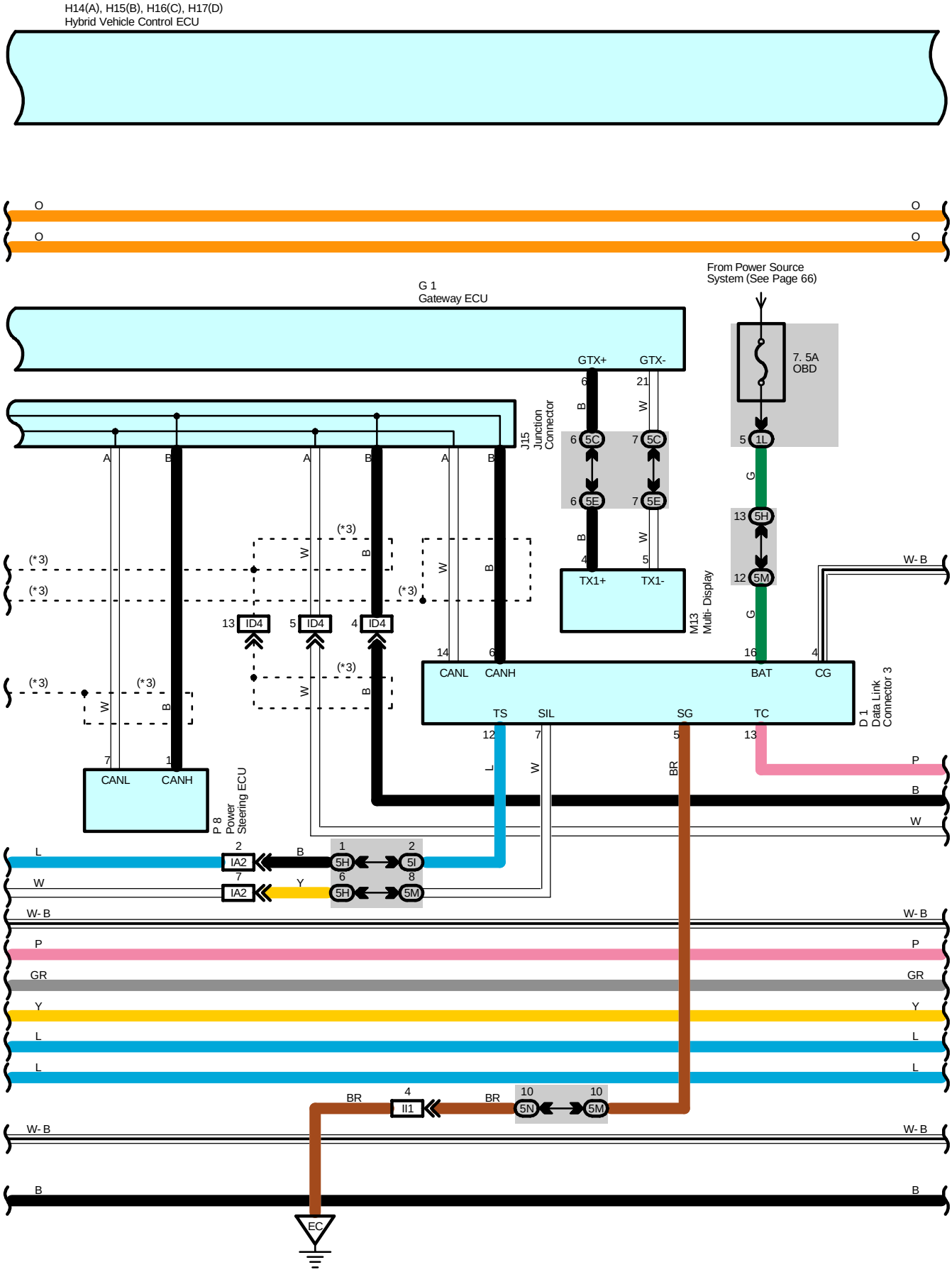
H14(A), H15(B), H16(C), H17(D)
Hybrid Vehicle Control ECU
G 1
Gateway ECU
From Power Source
System (See Page 66)
7. 5A
OBD
GTX+
GTX-
J15
Junction
Connector
TX1+
TX1-
M13
Multi- Display
CANL
CANH
BAT
CG
TS
SIL
SG
TC
D 1
Data Link
Connector 3
P 8
Power
Steering ECU
ID4
IA2
II1
(*3)
W- B
EC

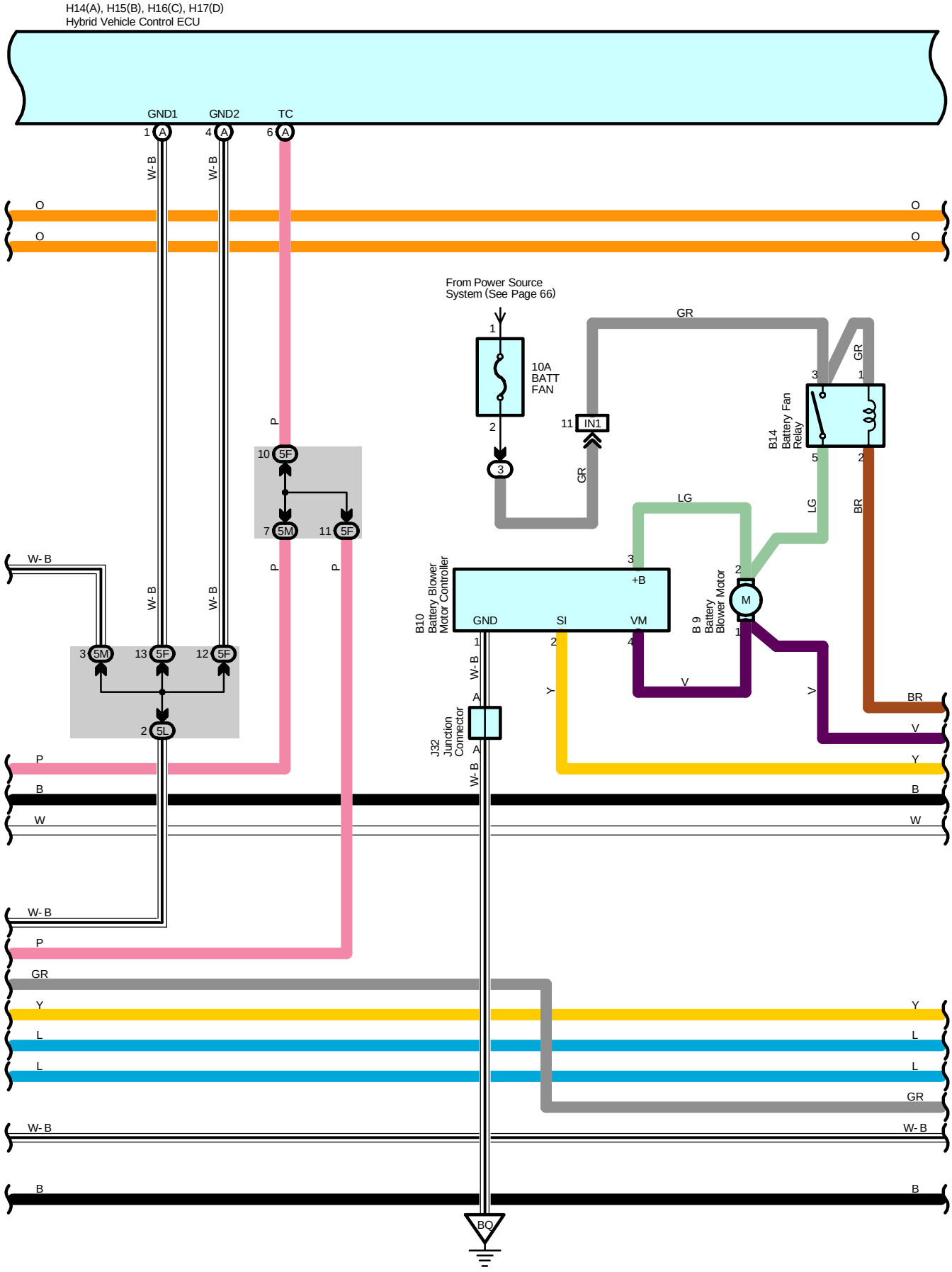
H14(A), H15(B), H16(C), H17(D)
Hybrid Vehicle Control ECU
GND1
GND2
TC
From Power Source System (See Page 66)
10A BATT FAN
IN1
B14 Battery Fan Relay
B10 Battery Blower Motor Controller
B 9 Battery Blower Motor
J32 Junction Connector
GND
SI
VM
+B
BQ

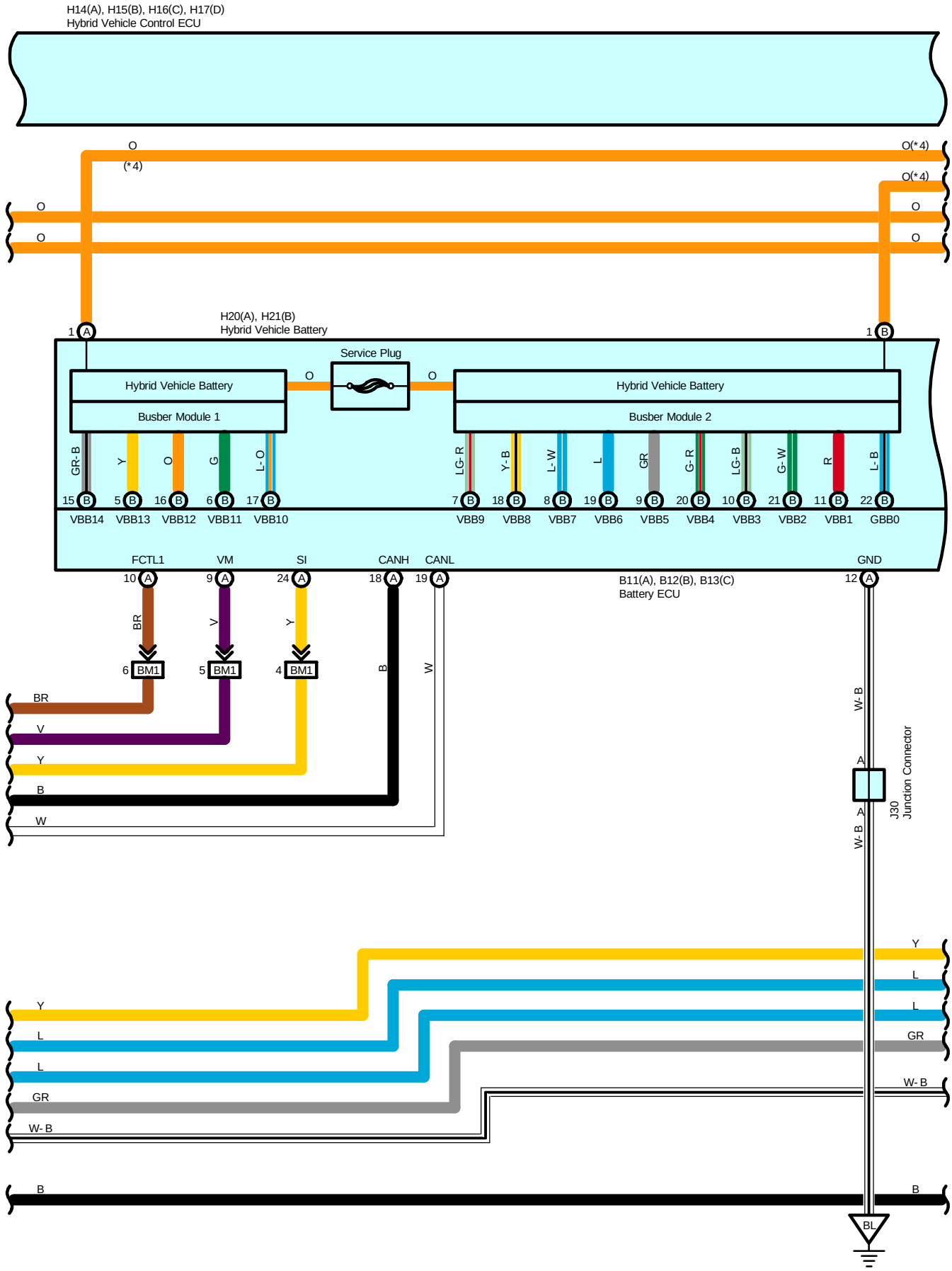
H14(A), H15(B), H16(C), H17(D)
Hybrid Vehicle Control ECU
O
(*4)
O(*4)
O
O
H20(A), H21(B)
Hybrid Vehicle Battery
Service Plug
Hybrid Vehicle Battery
Busber Module 1
Hybrid Vehicle Battery
Busber Module 2
GR-B
Y
O
G
L-O
LG-R
Y-B
L-W
L
GR
G-R
LG-B
G-W
R
L-B
VBB14
VBB13
VBB12
VBB11
VBB10
VBB9
VBB8
VBB7
VBB6
VBB5
VBB4
VBB3
VBB2
VBB1
GBB0
FCTL1
VM
SI
CANH
CANL
GND
B11(A), B12(B), B13(C)
Battery ECU
BM1
BR
V
Y
B
W
W-B
J30
Junction Connector
L
GR
BL

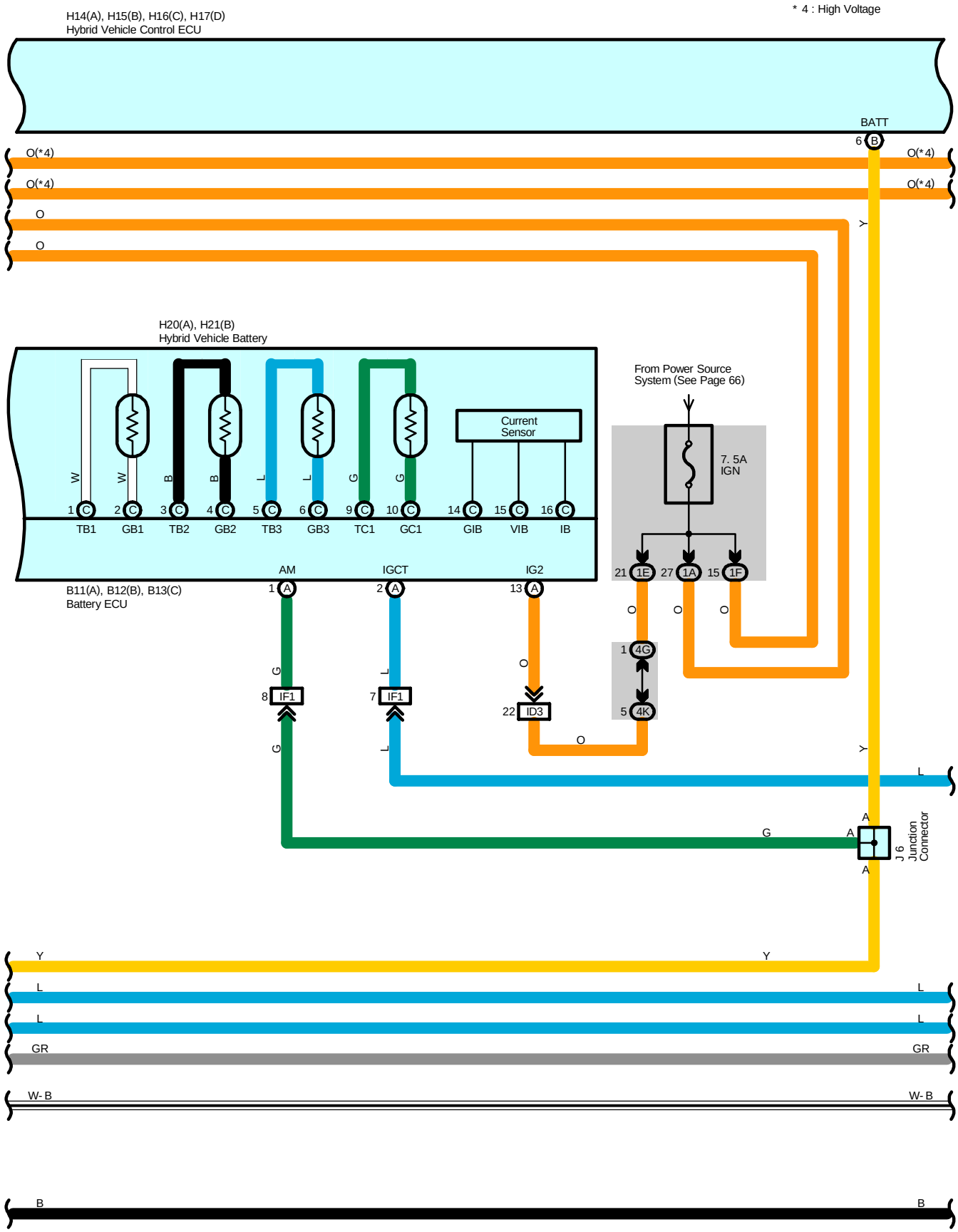
H14(A), H15(B), H16(C), H17(D)
Hybrid Vehicle Control ECU
* 4 : High Voltage
BATT
6 B
O(*4)
O(*4)
O(*4)
O(*4)
O
O
Y
H20(A), H21(B)
Hybrid Vehicle Battery
From Power Source
System (See Page 66)
Current
Sensor
7. 5A
IGN
W
W
B
B
L
L
G
G
1 C
2 C
3 C
4 C
5 C
6 C
9 C
10 C
14 C
15 C
16 C
TB1
GB1
TB2
GB2
TB3
GB3
TC1
GC1
GIB
VIB
IB
21 1E
27 1A
15 1F
B11(A), B12(B), B13(C)
Battery ECU
AM
IGCT
IG2
1 A
2 A
13 A
O
O
O
1 4G
5 4K
G
L
O
8 IF1
7 IF1
22 ID3
G
L
O
Y
L
A
A
G
J 6
Junction
Connector
A
Y
Y
L
L
L
L
GR
GR
W- B
W- B
B
B

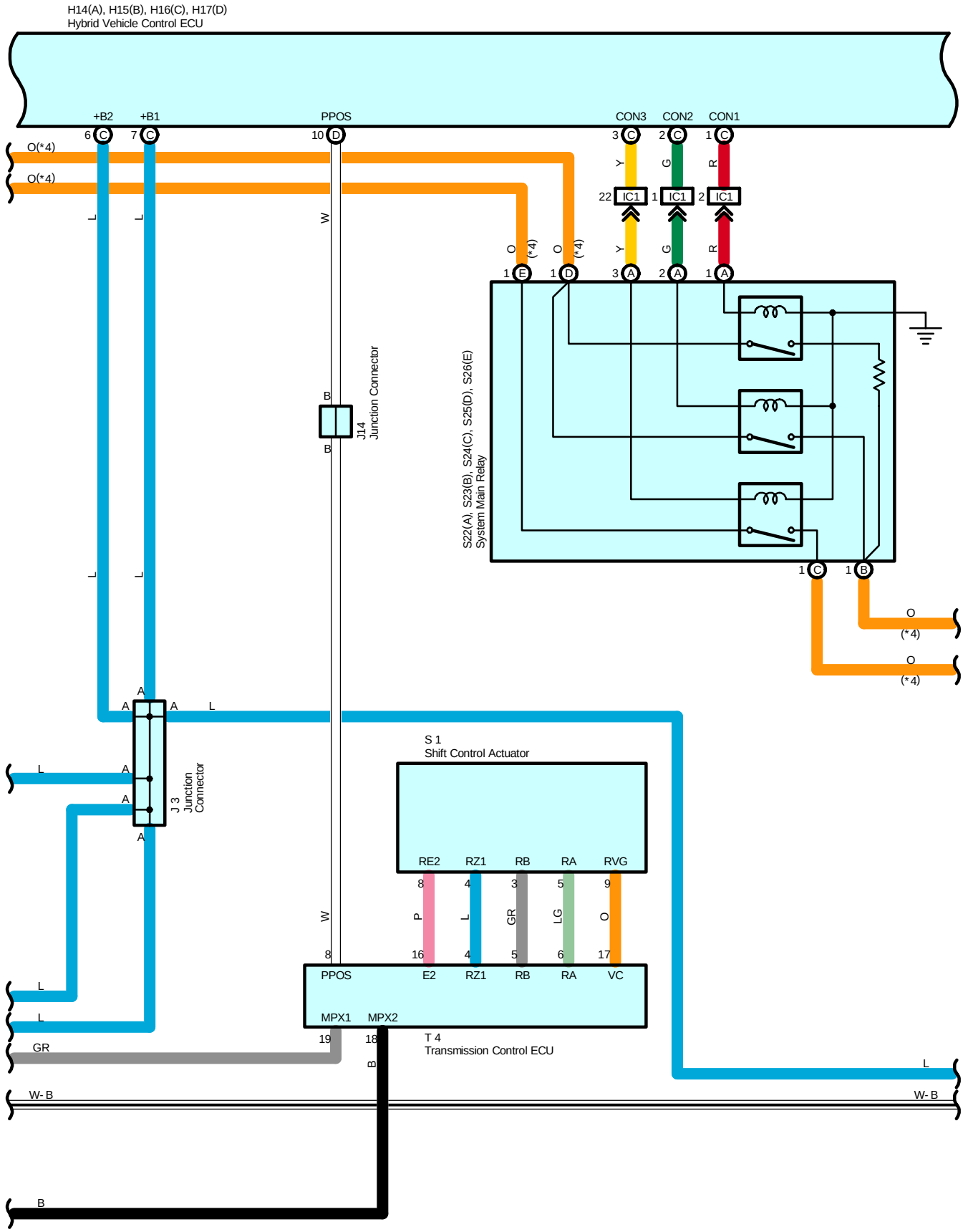
H14(A), H15(B), H16(C), H17(D)
Hybrid Vehicle Control ECU
+B2
+B1
PPOS
CON3
CON2
CON1
O(*4)
O(*4)
IC1
J14
Junction Connector
S22(A), S23(B), S24(C), S25(D), S26(E)
System Main Relay
J 3
Junction
Connector
S 1
Shift Control Actuator
RE2
RZ1
RB
RA
RVG
PPOS
E2
RZ1
RB
RA
VC
MPX1
MPX2
T 4
Transmission Control ECU
GR
W- B
B

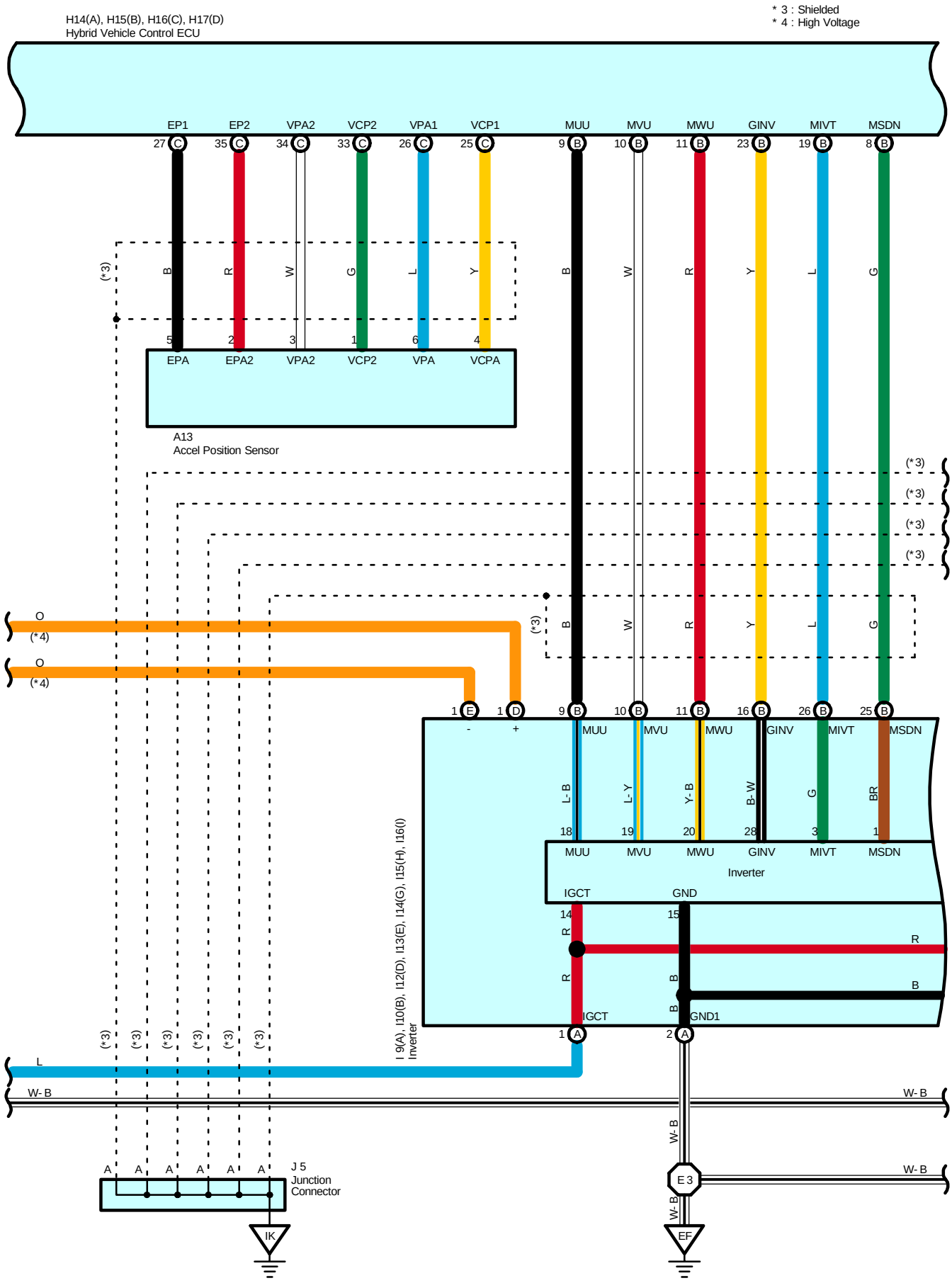
H14(A), H15(B), H16(C), H17(D)
Hybrid Vehicle Control ECU
* 3 : Shielded
* 4 : High Voltage
EP1
EP2
VPA2
VCP2
VPA1
VCP1
MUU
MVU
MWU
GINV
MIVT
MSDN
EPA
EPA2
VPA2
VCP2
VPA
VCPA
A13
Accel Position Sensor
(*3)
(*4)
O
L
W- B
B
R
W
G
L
Y
BR
L- B
L- Y
Y- B
B- W
Inverter
IGCT
GND
GND1
I 9(A), I10(B), I12(D), I13(E), I14(G), I15(H), I16(I)
Inverter
J 5
Junction
Connector
E 3
IK
EF

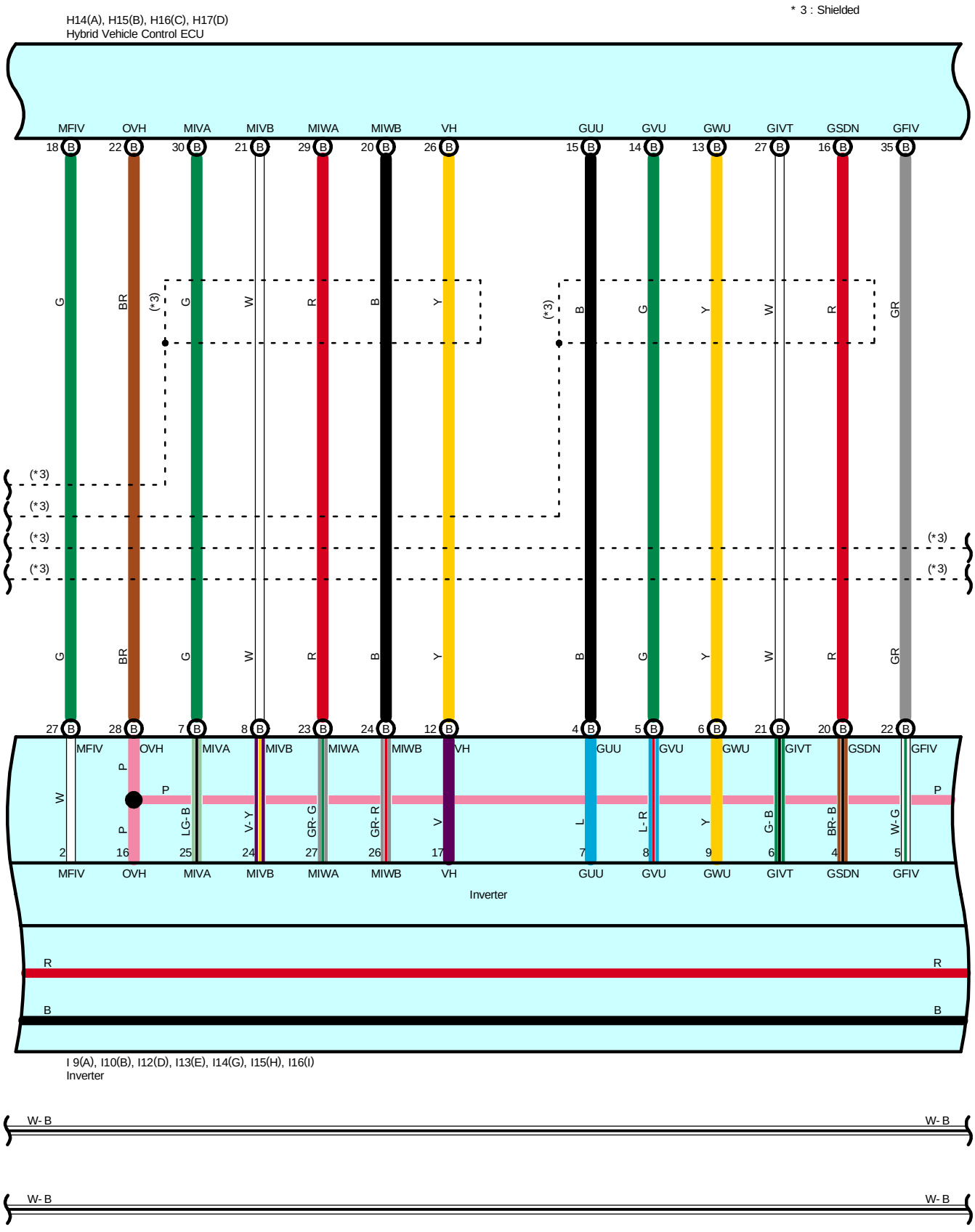
* 3 : Shielded
H14(A), H15(B), H16(C), H17(D)
Hybrid Vehicle Control ECU
MFIV
OVH
MIVA
MIVB
MIWA
MIWB
VH
GUU
GVU
GWU
GIVT
GSDN
GFIV
18
22
30
21
29
20
26
15
14
13
27
16
35
G
BR
G
W
R
B
Y
B
G
Y
W
R
GR
(*3)
(*3)
(*3)
(*3)
(*3)
(*3)
(*3)
(*3)
27
28
7
8
23
24
12
4
5
6
21
20
22
W
P
P
LG-B
V-Y
GR-G
GR-R
V
L
L-R
Y
G-B
BR-B
W-G
P
2
16
25
24
27
26
17
7
8
9
6
4
5
Inverter
R
R
B
B
I 9(A), I10(B), I12(D), I13(E), I14(G), I15(H), I16(I)
Inverter
W-B
W-B
W-B
W-B

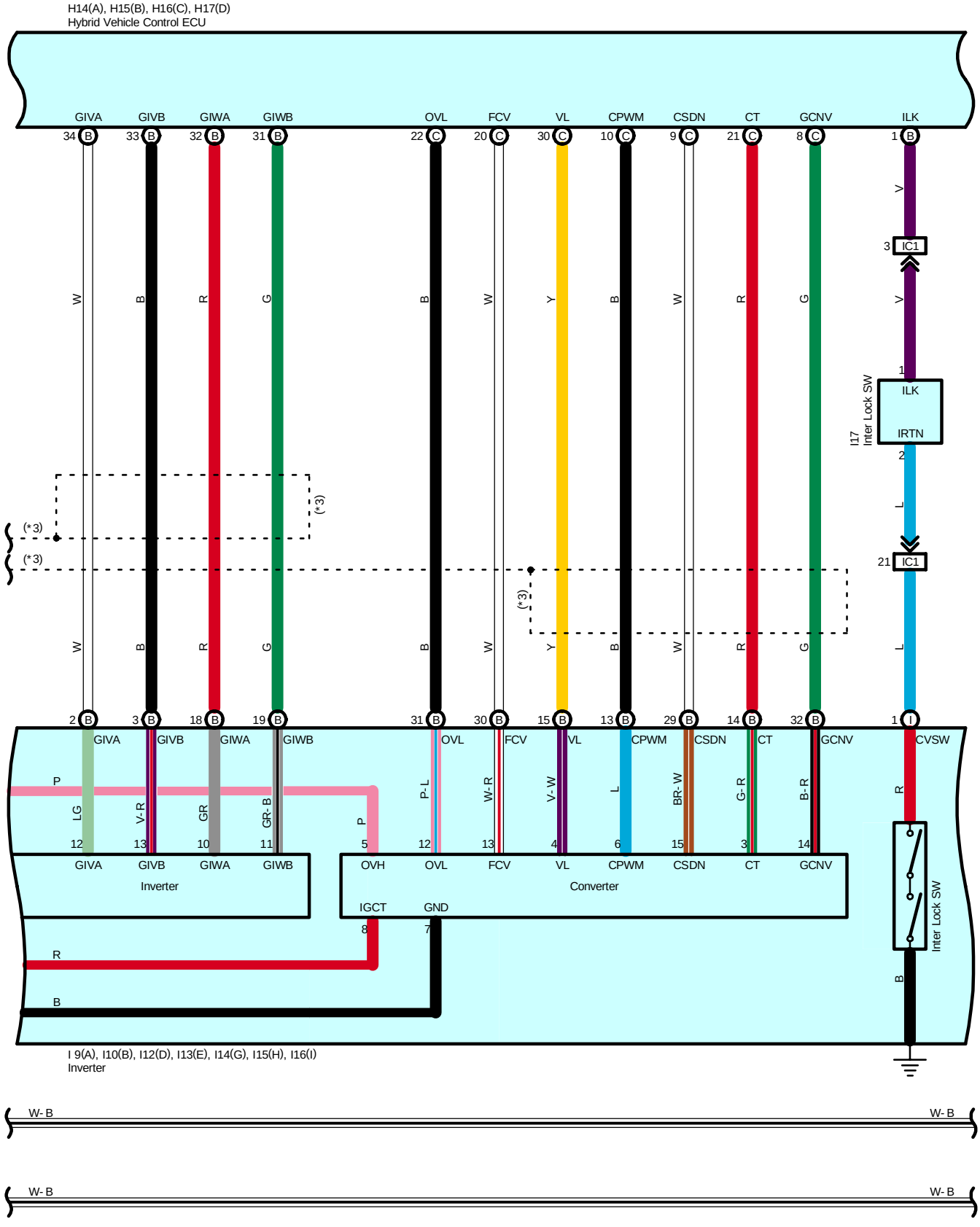
H14(A), H15(B), H16(C), H17(D)
Hybrid Vehicle Control ECU
GIVA
GIVB
GIWA
GIWB
OVL
FCV
VL
CPWM
CSDN
CT
GCNV
ILK
34 B
33 B
32 B
31 B
22 C
20 C
30 C
10 C
9 C
21 C
8 C
1 B
W
B
R
G
B
W
Y
B
W
R
G
V
3 IC1
V
1
ILK
IRTN
I17
Inter Lock SW
2
L
21 IC1
L
(*3)
(*3)
(*3)
(*3)
2 B
3 B
18 B
19 B
31 B
30 B
15 B
13 B
29 B
14 B
32 B
1 I
GIVA
GIVB
GIWA
GIWB
OVL
FCV
VL
CPWM
CSDN
CT
GCNV
CVSW
P
LG
V-R
GR
GR-B
P
P-L
W-R
V-W
L
BR-W
G-R
B-R
R
12
13
10
11
5
12
13
4
6
15
3
14
GIVA
GIVB
GIWA
GIWB
Inverter
OVH
OVL
FCV
VL
CPWM
CSDN
CT
GCNV
Converter
IGCT
GND
8
7
R
B
Inter Lock SW
B
I 9(A), I10(B), I12(D), I13(E), I14(G), I15(H), I16(I)
Inverter
W-B
W-B
W-B
W-B

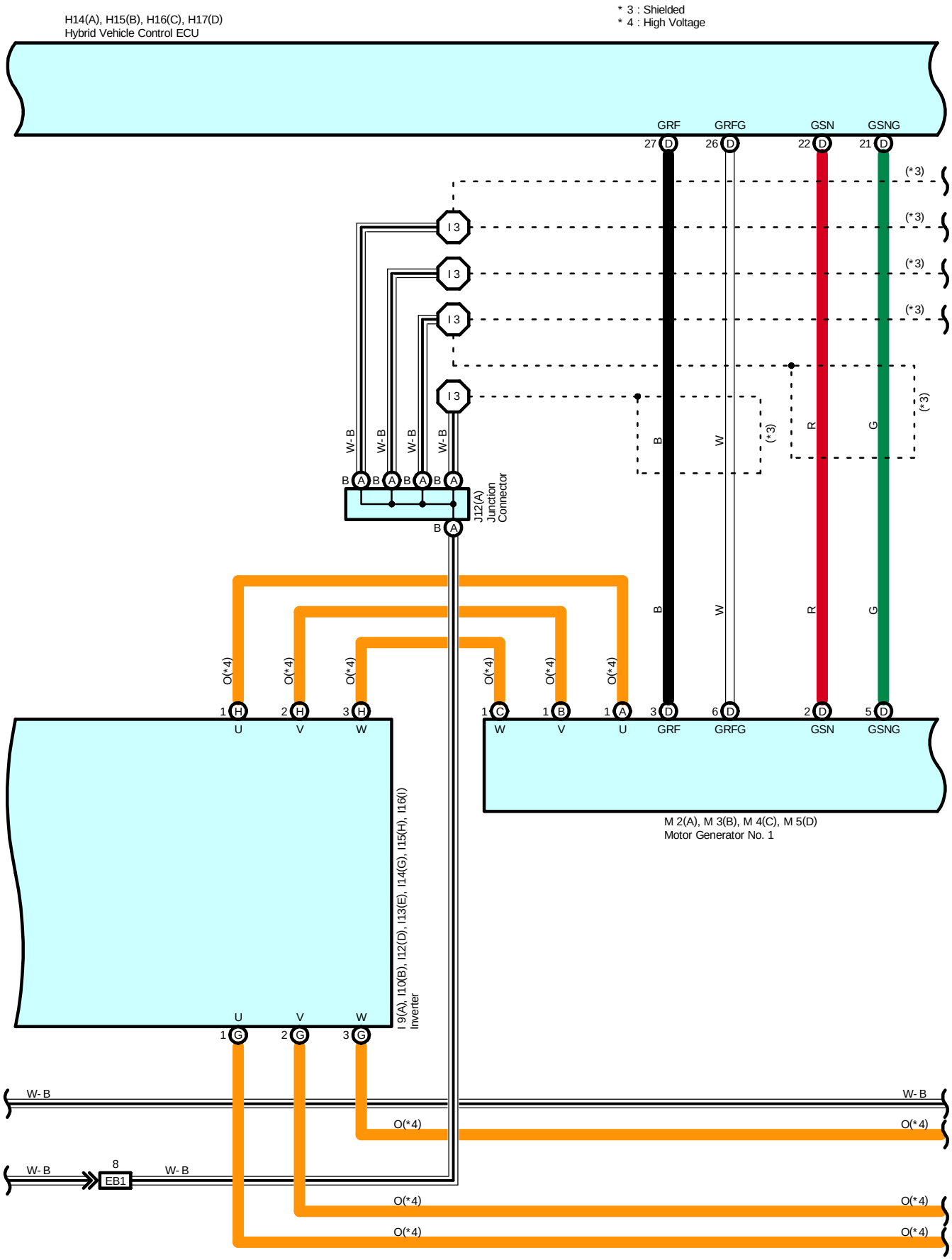
H14(A), H15(B), H16(C), H17(D)
Hybrid Vehicle Control ECU
* 3 : Shielded
* 4 : High Voltage
GRF
GRFG
GSN
GSNG
27 D
26 D
22 D
21 D
(*3)
I 3
W- B
B A
J12(A)
Junction
Connector
B
W
R
G
O(*4)
1 H U
2 H V
3 H W
1 C W
1 B V
1 A U
3 D GRF
6 D GRFG
2 D GSN
5 D GSNG
M 2(A), M 3(B), M 4(C), M 5(D)
Motor Generator No. 1
I 9(A), I10(B), I12(D), I13(E), I14(G), I15(H), I16(I)
Inverter
1 G U
2 G V
3 G W
8
EB1

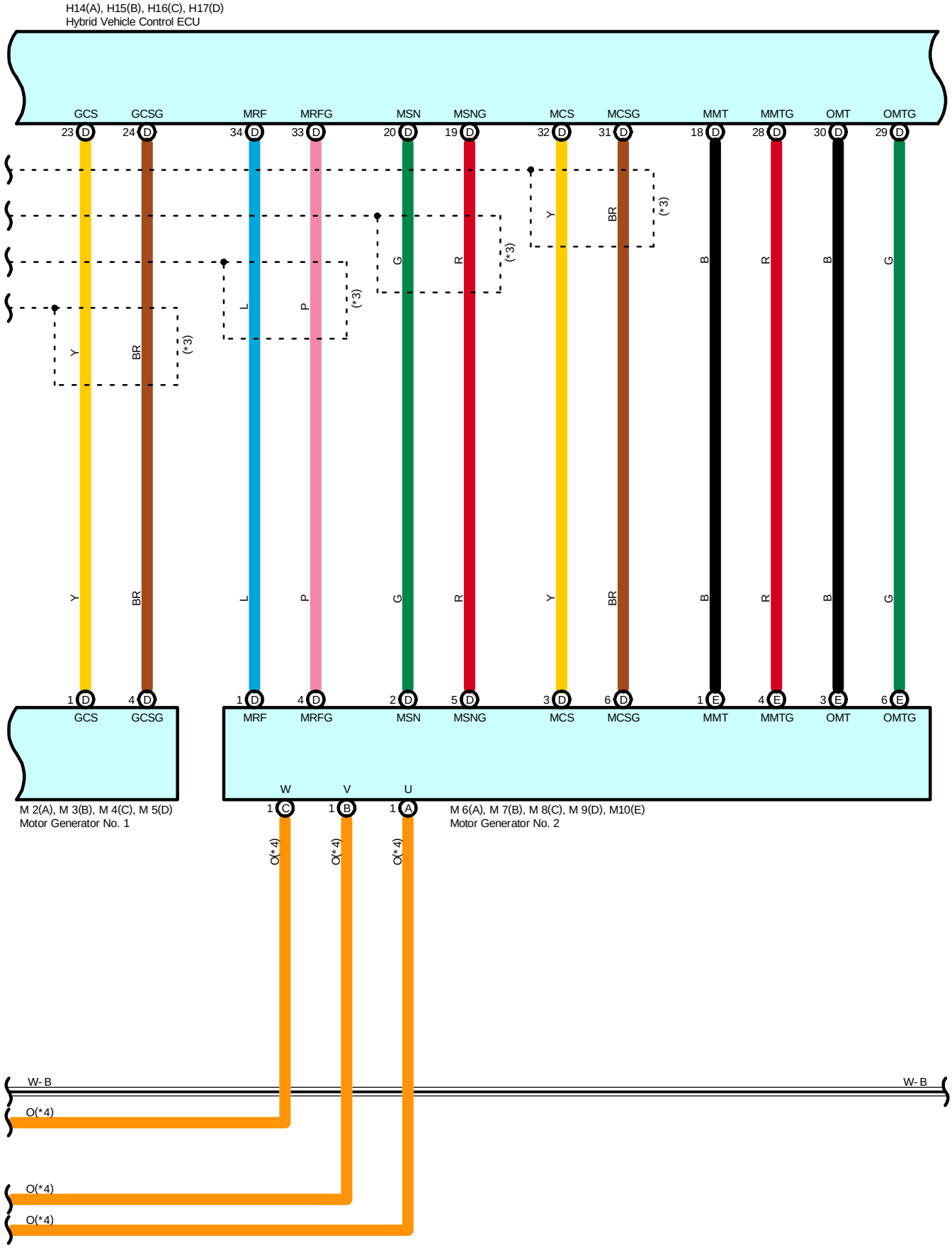
H14(A), H15(B), H16(C), H17(D)
Hybrid Vehicle Control ECU
GCS
GCSG
MRF
MRFG
MSN
MSNG
MCS
MCSG
MMT
MMTG
OMT
OMTG
23 D
24 D
34 D
33 D
20 D
19 D
32 D
31 D
18 D
28 D
30 D
29 D
Y
BR
L
P
G
R
Y
BR
B
R
B
G
(*3)
1 D
4 D
1 D
4 D
2 D
5 D
3 D
6 D
1 E
4 E
3 E
6 E
M 2(A), M 3(B), M 4(C), M 5(D)
Motor Generator No. 1
M 6(A), M 7(B), M 8(C), M 9(D), M10(E)
Motor Generator No. 2
W
V
U
1 C
1 B
1 A
O(*4)
W- B
O(*4)
O(*4)
O(*4)

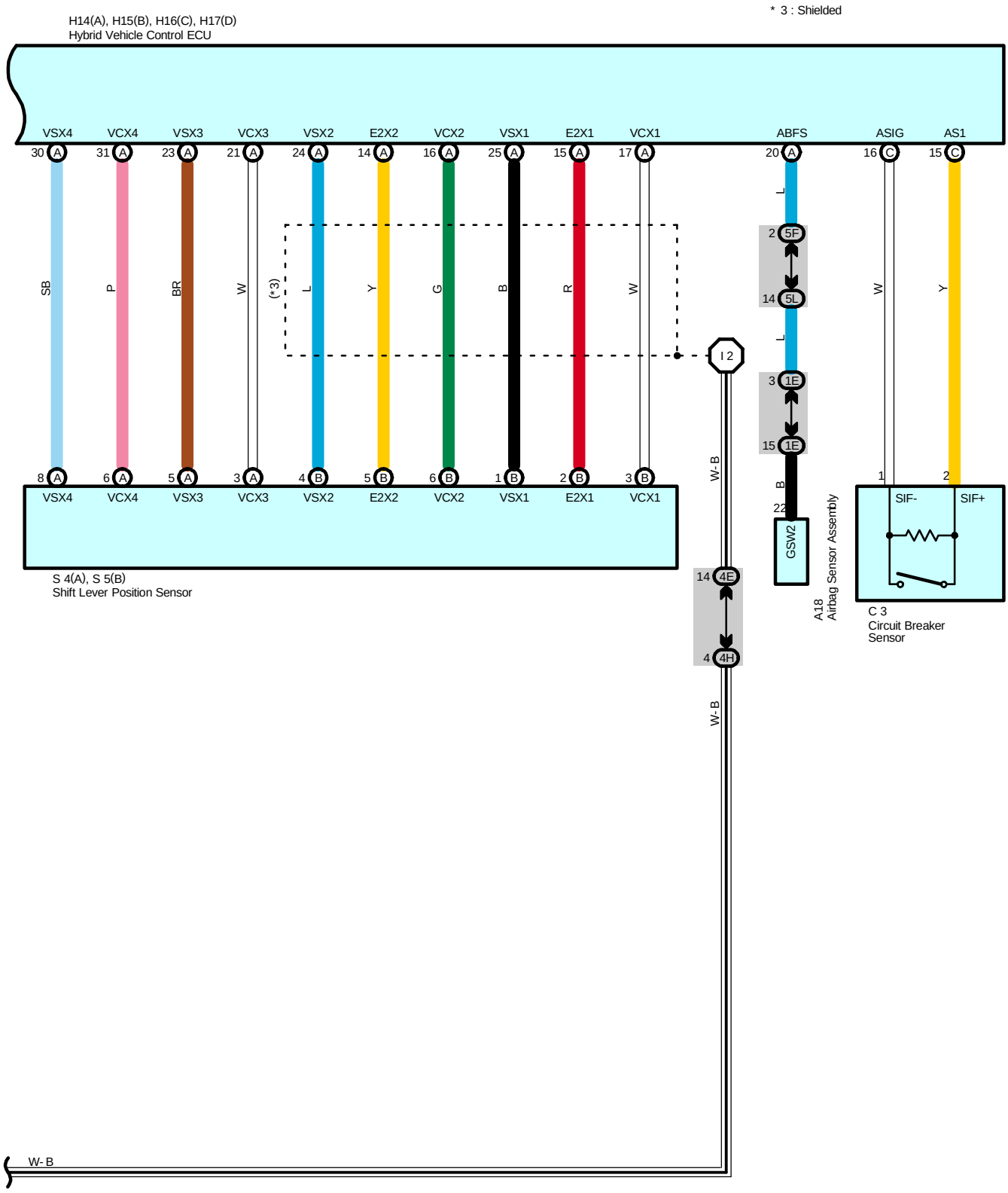
H14(A), H15(B), H16(C), H17(D)
Hybrid Vehicle Control ECU
* 3 : Shielded
VSX4 VCX4 VSX3 VCX3 VSX2 E2X2 VCX2 VSX1 E2X1 VCX1
30 31 23 21 24 14 16 25 15 17
SB P BR W (*3) L Y G B R W
8 6 5 3 4 5 6 1 2 3
VSX4 VCX4 VSX3 VCX3 VSX2 E2X2 VCX2 VSX1 E2X1 VCX1
S 4(A), S 5(B)
Shift Lever Position Sensor
I 2
W-B
14 4E
4 4H
W-B
W-B
ABFS ASIG AS1
20 16 15
L
2 5F
14 5L
L
3 1E
15 1E
B
22
GSW2
A18
Airbag Sensor Assembly
W Y
1 2
SIF- SIF+
C 3
Circuit Breaker
Sensor

[Details of Engine Control Module Section]

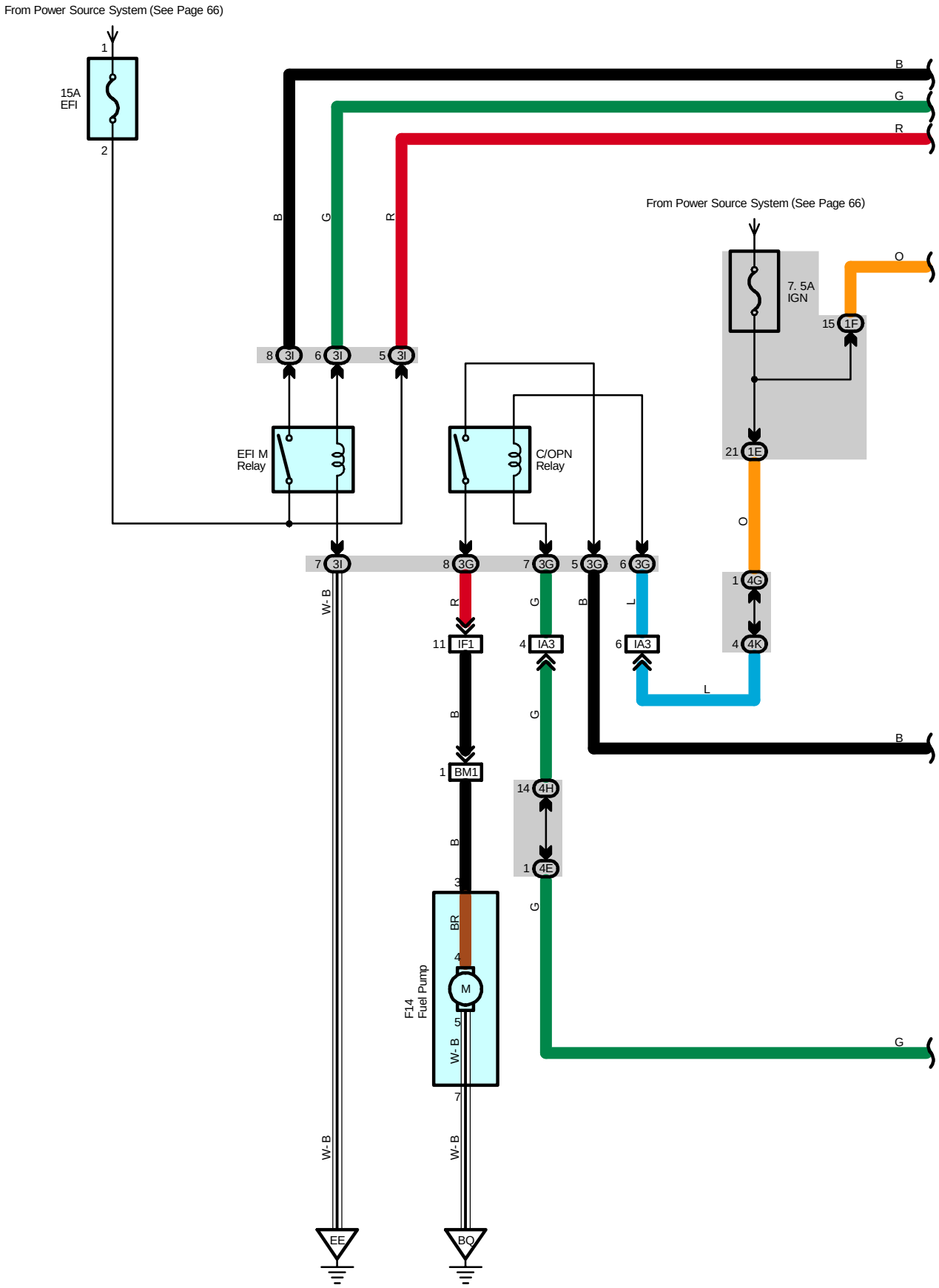

[Details of Engine Control Module Section]

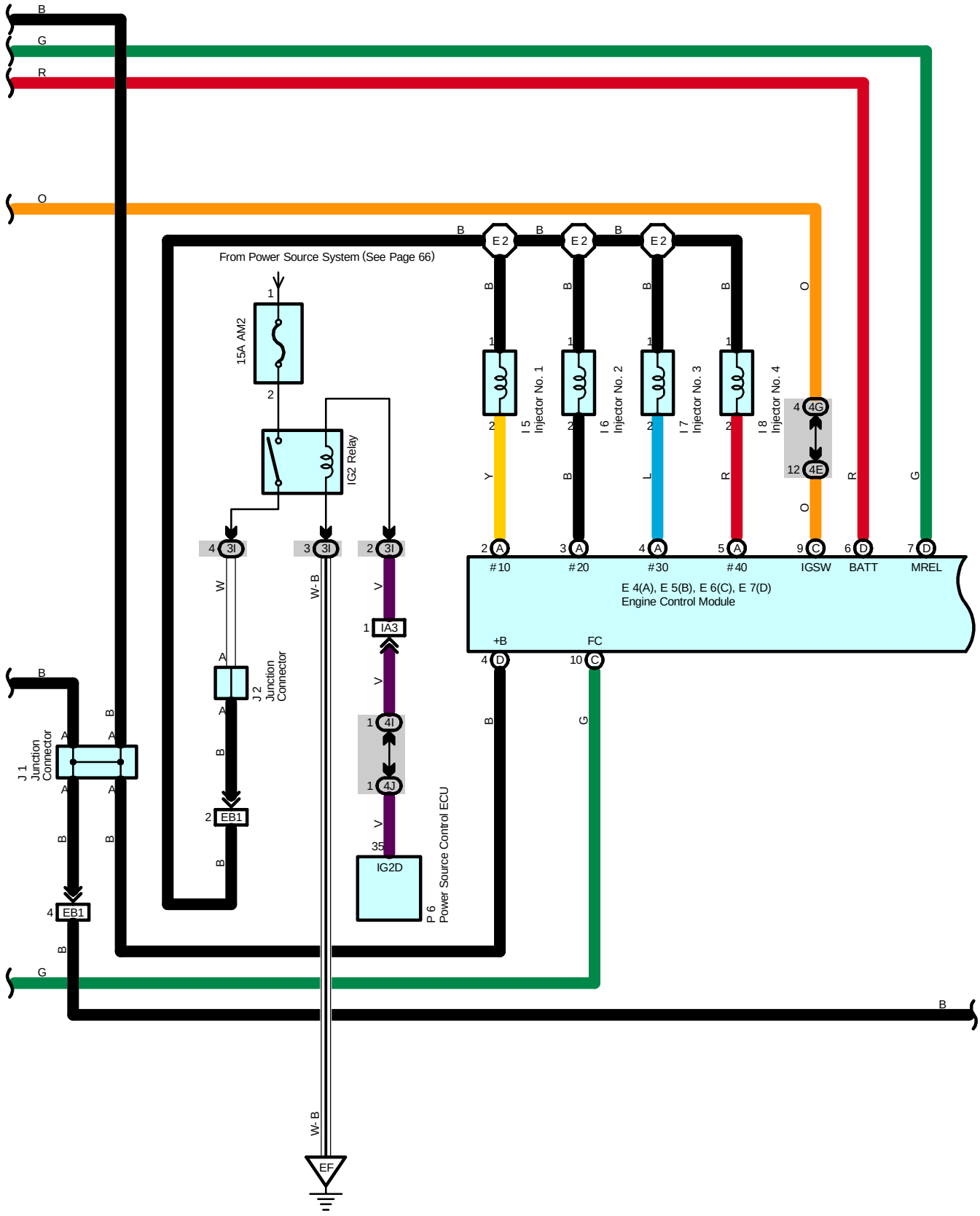

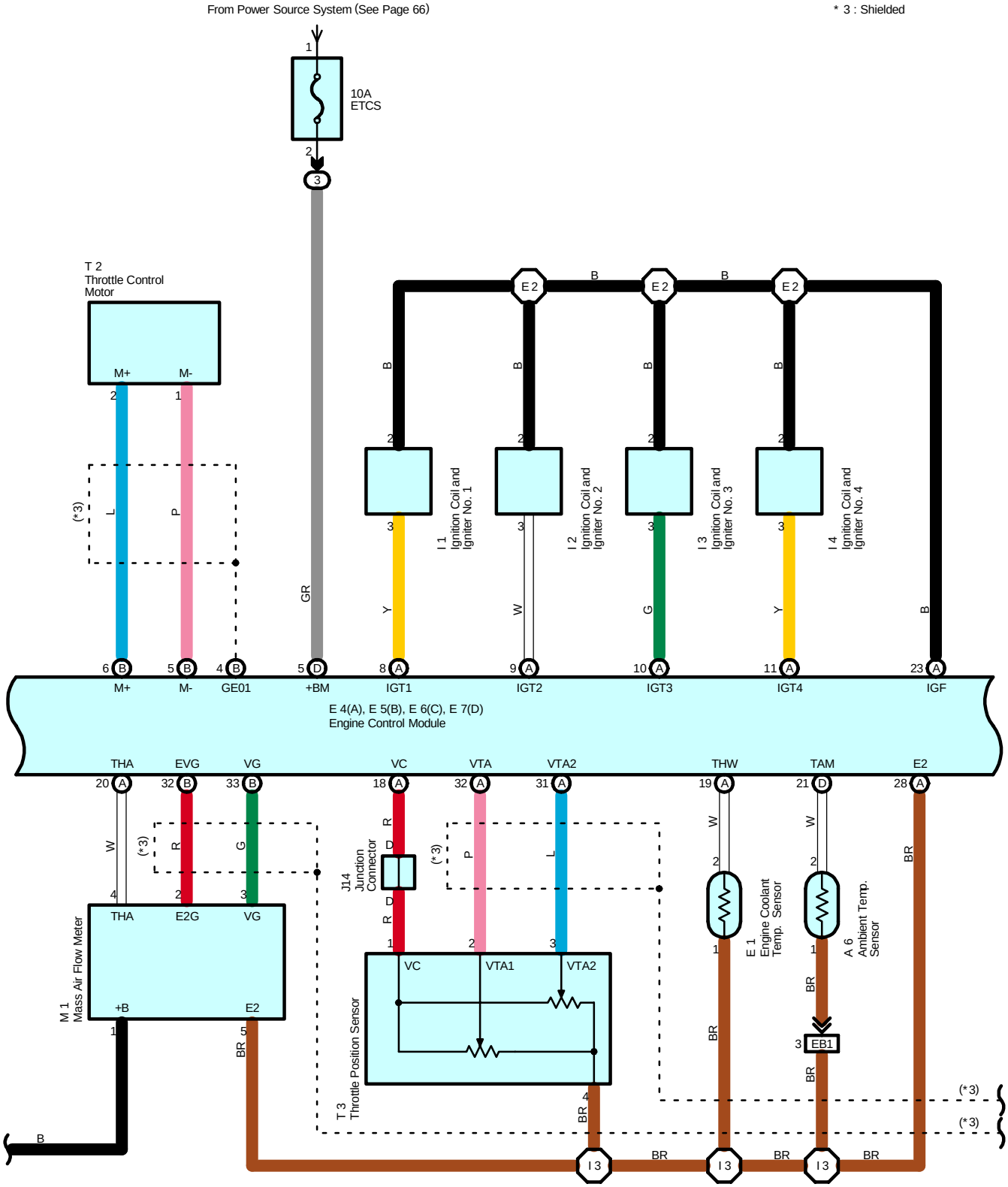
From Power Source System (See Page 66)
* 3 : Shielded
10A
ETCS
T 2
Throttle Control
Motor
M+
M-
(*3)
GR
E 2
I 1
Ignition Coil and
Igniter No. 1
I 2
Ignition Coil and
Igniter No. 2
I 3
Ignition Coil and
Igniter No. 3
I 4
Ignition Coil and
Igniter No. 4
GE01
+BM
IGT1
IGT2
IGT3
IGT4
IGF
E 4(A), E 5(B), E 6(C), E 7(D)
Engine Control Module
THA
EVG
VG
VC
VTA
VTA2
THW
TAM
E2
J14
Junction
Connector
M 1
Mass Air Flow Meter
E2G
+B
T 3
Throttle Position Sensor
VTA1
E 1
Engine Coolant
Temp. Sensor
A 6
Ambient Temp.
Sensor
EB1
I 3

[Details of Engine Control Module Section]

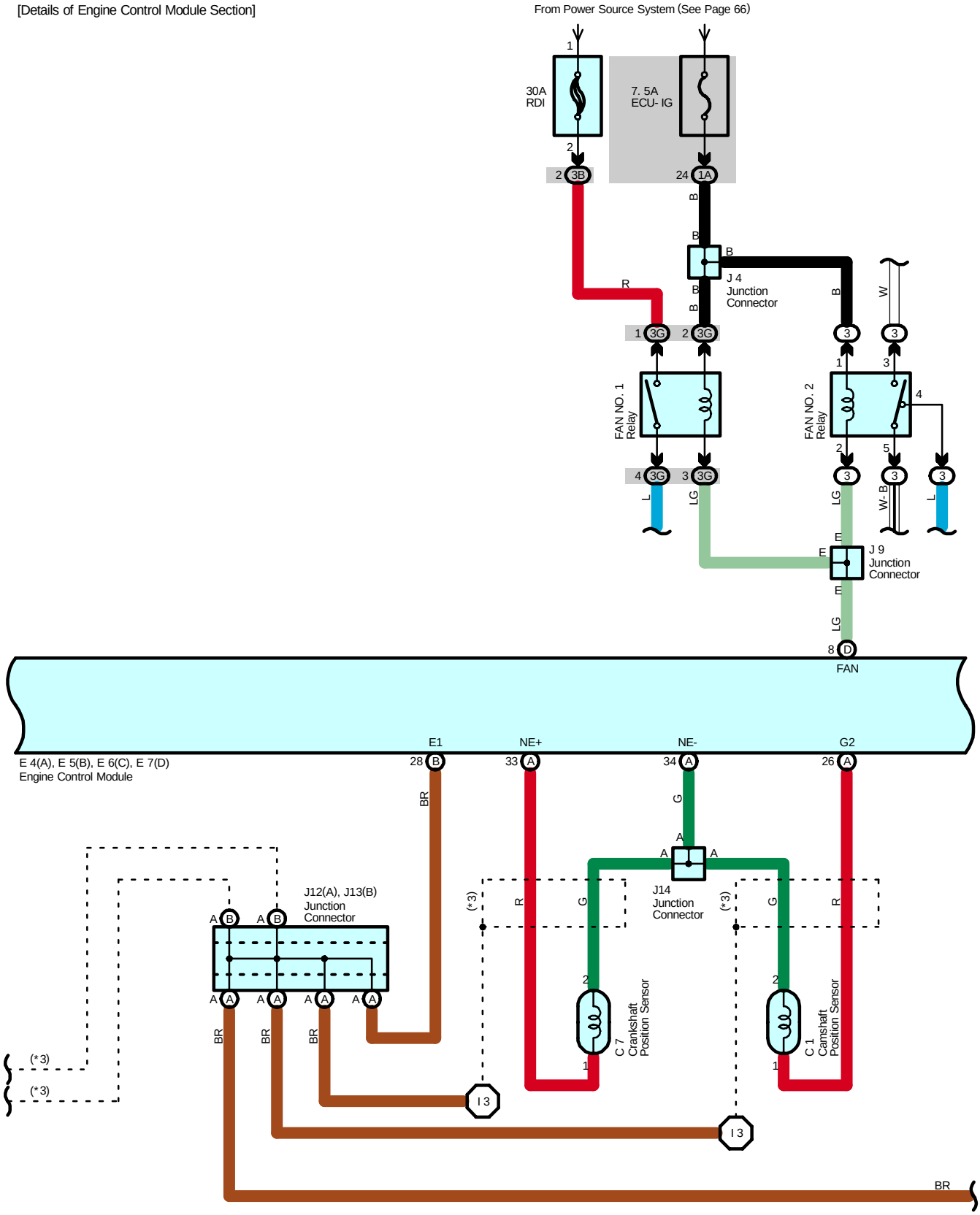

* 3 : Shielded

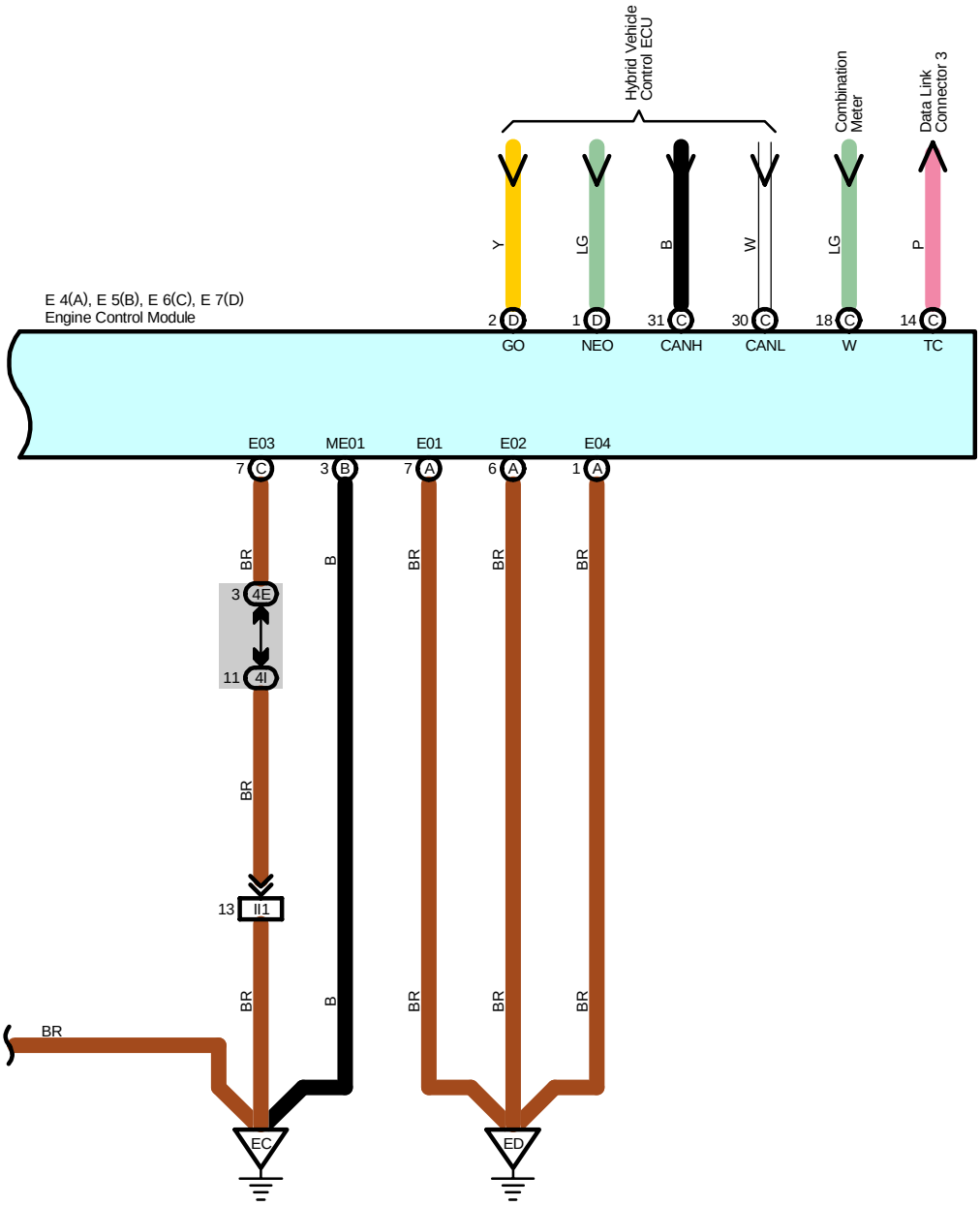
Hybrid Vehicle Control ECU
Combination Meter
Data Link Connector 3
Y
LG
B
W
LG
P
E 4(A), E 5(B), E 6(C), E 7(D)
Engine Control Module
2 D GO
1 D NEO
31 C CANH
30 C CANL
18 C W
14 C TC
E03
ME01
E01
E02
E04
7 C
3 B
7 A
6 A
1 A
BR
B
BR
BR
BR
3 4E
11 4I
BR
13 I1
BR
B
BR
BR
BR
BR
EC
ED

[Details of Skid Control ECU Section]

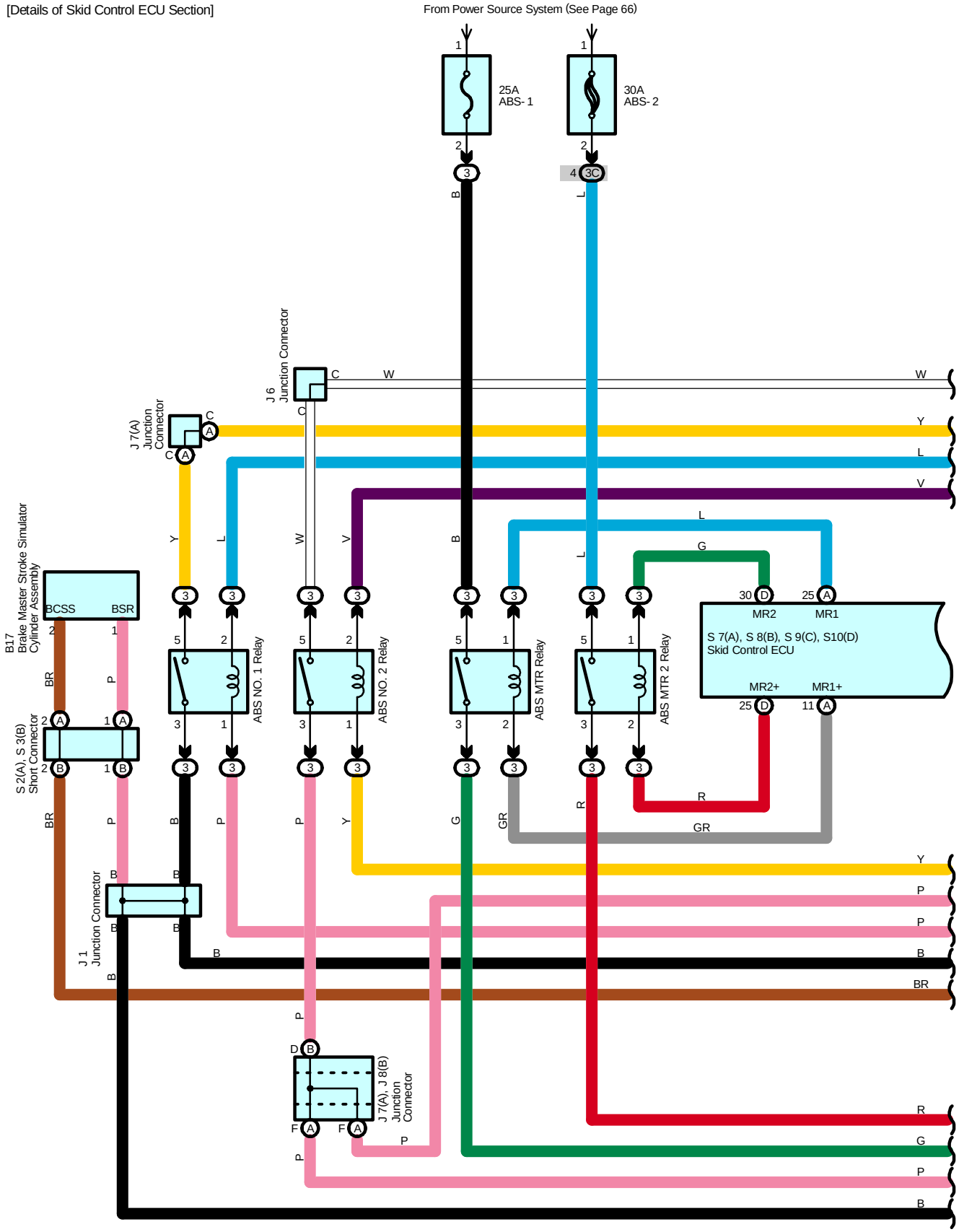

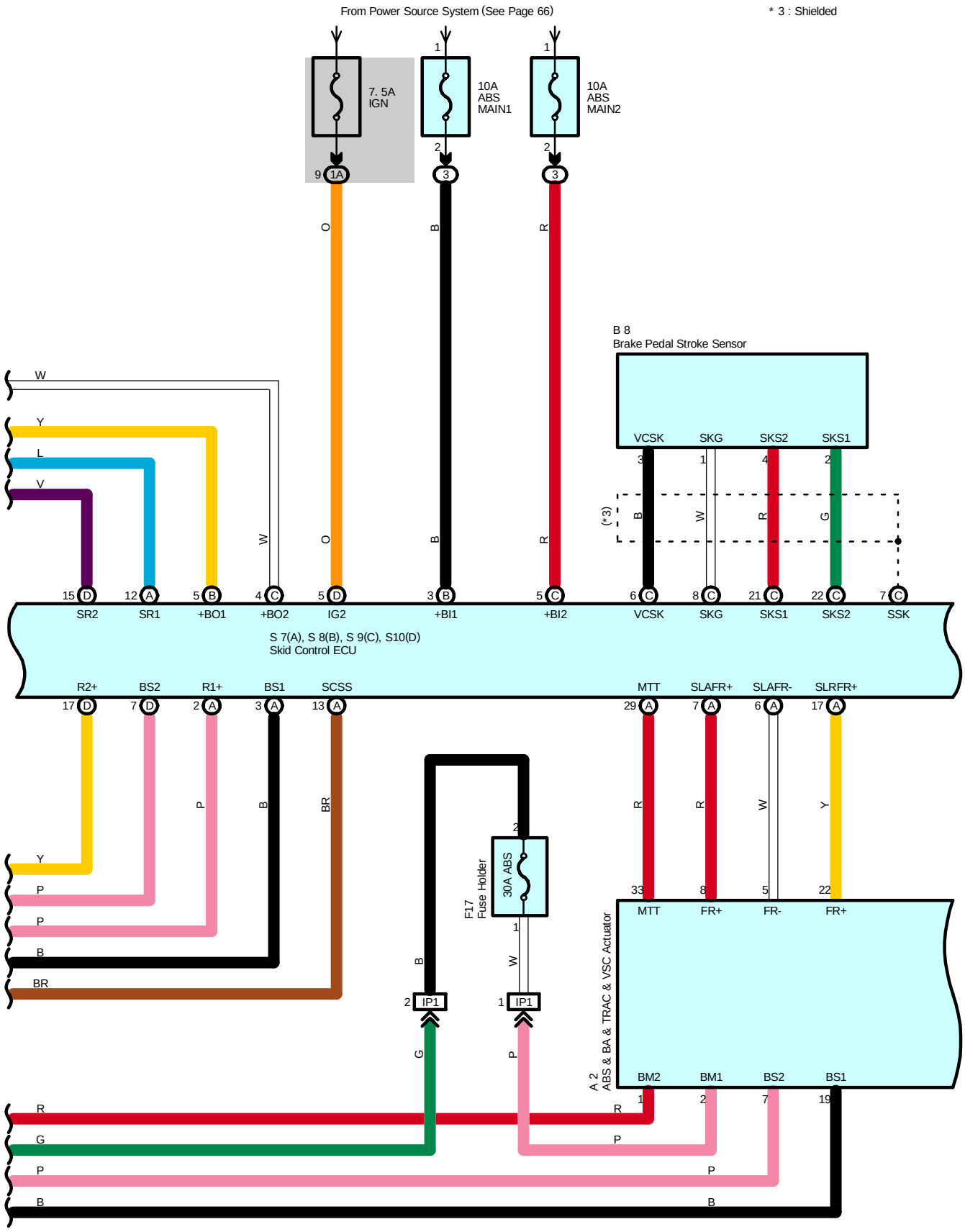
From Power Source System (See Page 66)
* 3 : Shielded
7. 5A
IGN
10A
ABS
MAIN1
10A
ABS
MAIN2
B 8
Brake Pedal Stroke Sensor
VCSK
SKG
SKS2
SKS1
(*3)
SR2
SR1
+BO1
+BO2
IG2
+BI1
+BI2
VCSK
SKG
SKS1
SKS2
SSK
S 7(A), S 8(B), S 9(C), S10(D)
Skid Control ECU
R2+
BS2
R1+
BS1
SCSS
MTT
SLAFR+
SLAFR-
SLRFR+
F17
Fuse Holder
30A ABS
IP1
IP1
A 2
ABS & BA & TRAC & VSC Actuator
MTT
FR+
FR-
FR+
BM2
BM1
BS2
BS1

[Details of Skid Control ECU Section]

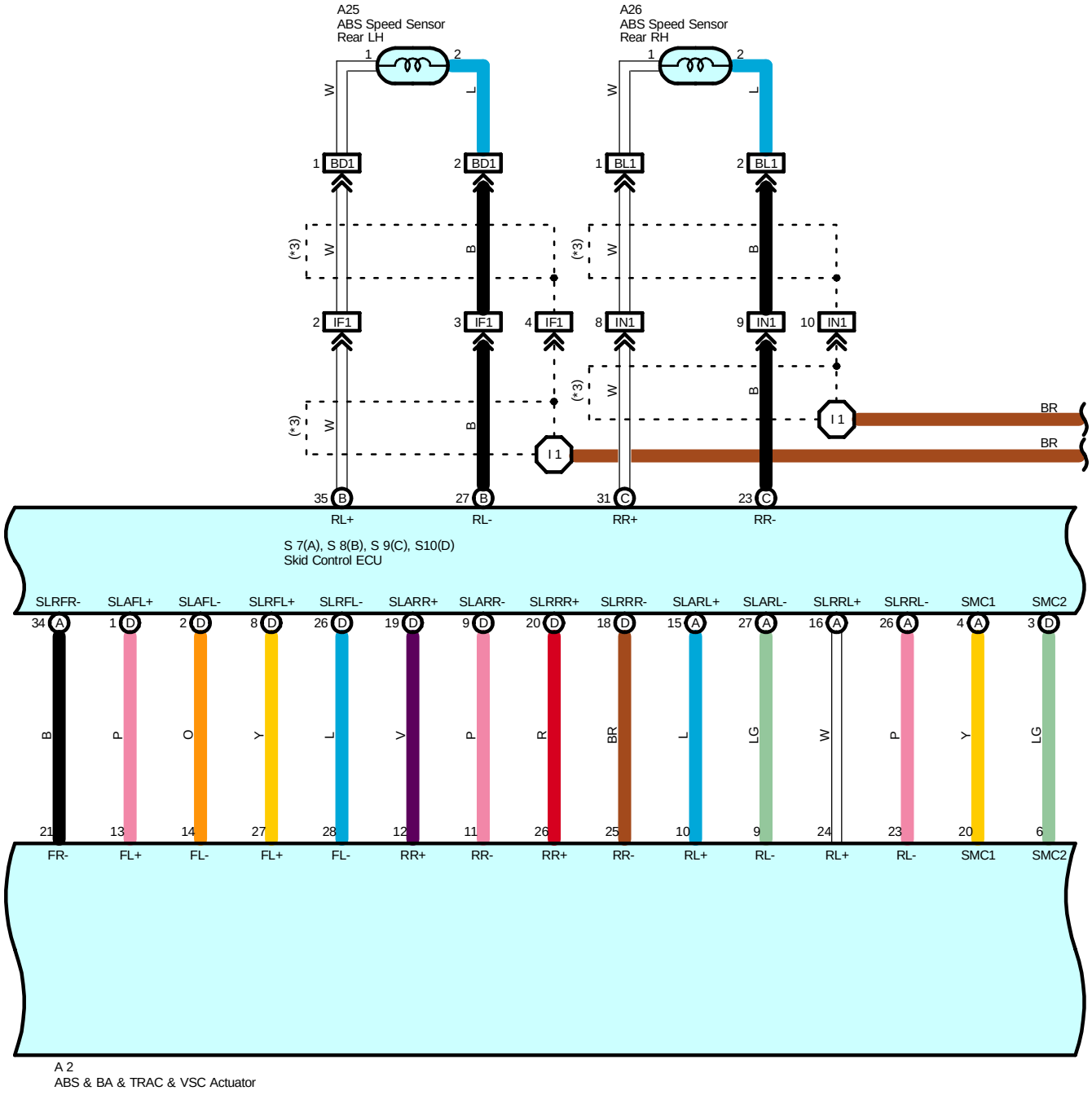

* 3 : Shielded

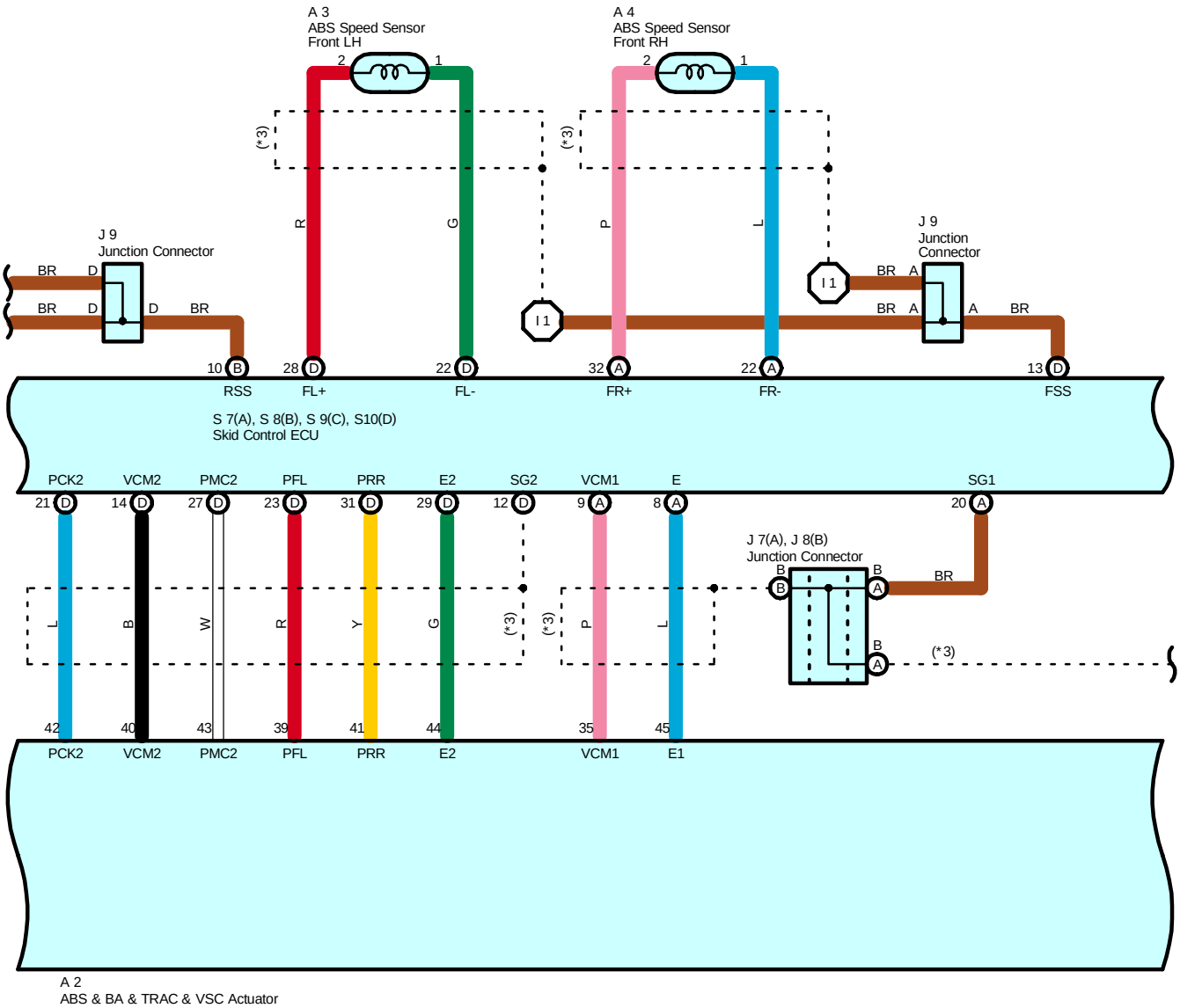
A 3
ABS Speed Sensor
Front LH
A 4
ABS Speed Sensor
Front RH
J 9
Junction Connector
J 9
Junction
Connector
I 1
I 1
BR
D
BR
D
D
BR
BR
A
BR
A
A
BR
R
G
P
L
(*3)
(*3)
10 B RSS
28 D FL+
22 D FL-
32 A FR+
22 A FR-
13 D FSS
S 7(A), S 8(B), S 9(C), S10(D)
Skid Control ECU
PCK2
VCM2
PMC2
PFL
PRR
E2
SG2
VCM1
E
SG1
21 D
14 D
27 D
23 D
31 D
29 D
12 D
9 A
8 A
20 A
J 7(A), J 8(B)
Junction Connector
B
B
B
A
B
A
BR
(*3)
L
B
W
R
Y
G
(*3)
(*3)
P
L
42
40
43
39
41
44
35
45
PCK2
VCM2
PMC2
PFL
PRR
E2
VCM1
E1
A 2
ABS & BA & TRAC & VSC Actuator

[Details of Skid Control ECU Section]

From Power Source System (See Page 66)

* 3 : Shielded

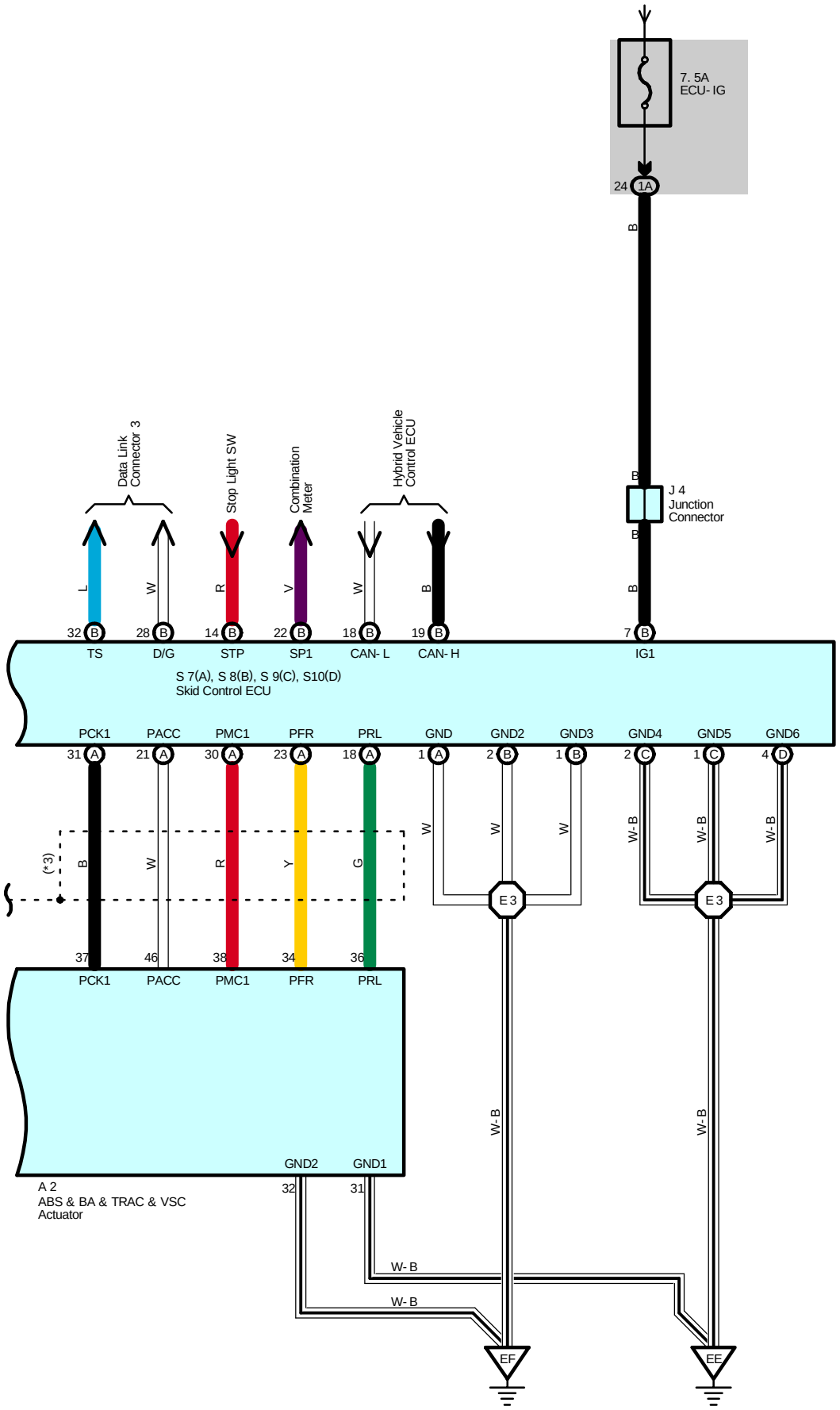

System Outline

This system controls the following modes in order to achieve the most efficient operations to match the driving conditions.

1. Motor Generator Condition

(1) Supply of electrical power from the HV battery to motor generator no.2 provides force to drive the wheels.

(2) While the tires are driven by the engine via the planetary gears, motor generator no.1 activates to supply electricity via the planetary gears to motor generator no.2 to drive the wheels.

(3) When the vehicle is decelerating, kinetic energy from the wheels is recovered into electrical energy and used to recharge the HV battery by motor generator no.2.

The hybrid vehicle control ECU switches between these modes (1, 2, 1+2, or 3) according to the driving conditions. However, when the state of charge of the HV battery is low, the HV battery is charged by the engine turning motor generator no.1.

2. Inverter

* The inverter converts high-voltage direct current of HV battery to three-phase alternating current for driving motor generator no.1 and motor generator no.2.
* The activation of the power transistors is controlled by the HV ECU. In addition, the inverter transmits necessary information for current control, such as the output amperage or voltage, to the HV ECU.
* Along with motor generator no.1 and motor generator no.2, the inverter is cooled by the exclusive radiator of the coolant system that is separated from that of the engine.
* In vehicle collision, circuit breaker sensor installed in the inverter outputs collision signal to stop the system.
* Boost converter has been adopted in the inverter, which increases rated voltage output from HV battery of DC 201.6V to DC 500V. After increasing voltage, the inverter converts direct current to alternating current.

3. Converter

The power source for auxiliary equipment of the vehicle such as the lights, audio system, and the air conditioning system, as well as the ECUs, is based on a rated voltage of DC 12V system. Because the generator outputs at DC 201.6V, the converter is used to transform the voltage from rated voltage of DC 201.6V to DC 12V in order to recharge the auxiliary battery. The converter is installed on the underside of the inverter.

4. HV Battery

* In Prius, the sealed nickel hydride (Ni-MH) battery has been adopted. This HV battery has high power density, lightweight and longevity to match characteristics of TOYOTA hybrid system. Because TOYOTA hybrid system controls charge/discharge to maintain charge/discharge control to maintain SOC (State of charge) at constant level while the vehicle is operating normally, it does not have to rely on the use of external recharges.
* The HV battery, battery ECU, system main relay and the cooling fan are put in a signal case which is placed in the luggage compartment behind the rear seat to make more effective use of vehicle space.
* A service plug that shuts off circuit is provided in the middle of the 28 modules (Rated battery capacity = 201.6V). Before servicing any portion of the high-voltage circuits, make sure to remove the service plug.
  Please do not READY ON when you remove the service plug. There is a possibility that battery ECU breaks down.
* To ensure the HV battery's performance, the battery ECU controls the operation of the cooling fan to avoid the heat that is generated in the HV battery during charging and discharging.

5. Regenerative System Operation

This system operates the motor as a generator to change the kinetic energy of the vehicle into the electricity when accel pedal is released or foot braking decelerates the vehicle speed, and store the electricity in the battery.

Service Hints

H14 (A), H15 (B), H16 (C) Hybrid Vehicle Control ECU

(B) 6-Ground : Always approx. 12 volts
(C) 6, (C) 7-Ground : Approx. 12 volts with the hybrid system at ON (READY) position
(A) 7-Ground : Approx. 12 volts with the power SW at IG ON position
(B) 3-Ground : Approx. 12 volts with the brake pedal depressed
(A) 1, (A) 4-Ground : Always continuity

○ : **Parts Location**

Code	See Page	Code	See Page	Code	See Page
A2	44	H15 B	47	J30	51
A3	44	H16 C	47	J32	51
A4	44	H17 D	47	M1	45
A6	44	H20 A	51	M2 A	45
A7 A	46	H21 B	51	M3 B	45
A8 B	46	I1	45	M4 C	45
A9	46	I2	45	M5 D	45
A13	46	I3	45	M6 A	45
A18	46	I4	45	M7 B	45
A25	50	I5	45	M8 C	45
A26	50	I6	45	M9 D	45
B5 A	46	I7	45	M10 E	45
B8	46	I8	45	M13	48
B9	50	I9 A	45	P6	49
B10	50	I10 B	45	P8	49
B11 A	50	I12 D	45	P11	49
B12 B	50	I13 E	45	S1	45
B13 C	50	I14 G	45	S2 A	45
B14	50	I15 H	45	S3 B	45
B17	44	I16 I	45	S4 A	49
C1	44	I17	51	S5 B	49
C3	44	J1	45	S7 A	49
C5 A	44	J2	45	S8 B	49
C6 B	44	J3	45	S9 C	49
C7	44	J4	45	S10 D	49
C10	47	J5	48	S11	49
D1	47	J6	48	S16	49
D7	50	J7 A	48	S22 A	53
E1	44	J8 B	48	S23 B	53
E4 A	47	J9	48	S24 C	53
E5 B	47	J12 A	48	S25 D	53
E6 C	47	J13 B	48	S26 E	53
E7 D	47	J14	48	S27	45
F14	51	J15	48	S28	45
F15 A	51	J16	48	T2	45
F16 B	51	J17	48	T3	45
F17	47	J18	48	T4	49
G1	47	J24	48	T5	49
H14 A	47	J25	48	W3	45

▭ : **Relay Blocks**

Code	See Page	Relay Blocks (Relay Block Location)
3	22	Engine Room R/B (Engine Compartment Left)

: **Junction Block and Wire Harness Connector**

Code	See Page	Junction Block and Wire Harness (Connector Location)
1A	28	Engine Room Main Wire and Driver Side J/B (Lower Finish Panel)
1B		
1C		
1D	28	Floor Wire and Driver Side J/B (Lower Finish Panel)
1E	28	Instrument Panel Wire and Driver Side J/B (Lower Finish Panel)
1F		
1G		
1J		
1L	29	
1M		
1N		
3B	23	Engine Room Main Wire and Engine Room J/B (Engine Compartment Left)
3C		
3D		
3E		
3G	24	
3I		
3J		
3M	23	Frame Wire and Engine Room J/B (Engine Compartment Left)
4C	36	Instrument Panel Wire and Center Connector No.1 (Behind the Combination Meter)
4D		
4E		
4F		
4G		
4H		
4I		
4J		
4K		
4L		
5C	40	Instrument Panel Wire and Center Connector No.2 (Instrument Panel Brace RH)
5D		
5E		
5F		
5G		
5H		
5I		
5J		
5K		
5L		
5M		
5N		

: Connector Joining Wire Harness and Wire Harness

Code	See Page	Joining Wire Harness and Wire Harness (Connector Location)
EB1	54	Engine Wire and Engine Room Main Wire (Inside of the Engine Room R/B)
IA1	56	Engine Room Main Wire and Instrument Panel Wire (Upper Parts of Front Body Pillar LH)
IA2		
IA3		
IC1	56	Engine Room Main Wire and Floor Wire (Cowl Side Panel LH)
ID3	56	Instrument Panel Wire and Floor Wire (Left Kick Panel)
ID4		
IF1	56	Floor Wire and Engine Room Main Wire (Left Kick Panel)
IG1	58	Instrument Panel Wire and Instrument Panel No.2 Wire (Behind the Combination Meter)
IG2		
II1	58	Engine Wire and Instrument Panel Wire (Behind the Glove Box)
IN1	58	Floor No.2 Wire and Engine Room Main Wire (Right Kick Panel)
IP1	58	Engine Room No.2 Wire and Engine Room Main Wire (Upper Parts of Front Body Pillar LH)
BD1	60	Skid Control Sensor No.1 Wire and Floor Wire (Front Side of Left Quarter Panel)
BE1	60	Frame Wire and Floor No.2 Wire (Front Side of Left Quarter Panel)
BL1	62	Skid Control Sensor No.2 Wire and Floor No.2 Wire (Front Side of Right Quarter Panel)
BM1	62	Floor No.2 Wire and Floor Wire (Rear Side of Right Quarter Panel)

: Ground Points

Code	See Page	Ground Points Location
EC	54	Engine Block
ED		
EE	54	Left Side of the Suspension Tower
EF		
IH	56	Cowl Side Panel LH
II	56	Instrument Panel Brace LH
IK	56	Cowl Side Panel RH
BL	60	Rear Side of Left Quarter Panel
BQ	60	Rear Side of Right Quarter Panel

: Splice Points

Code	See Page	Wire Harness with Splice Points	Code	See Page	Wire Harness with Splice Points
E2	54	Engine Wire	I2	58	Instrument Panel Wire
E3	54	Engine Room Main Wire	I3	58	Engine Wire
I1	58	Instrument Panel Wire			

Position of Parts in Engine Compartment

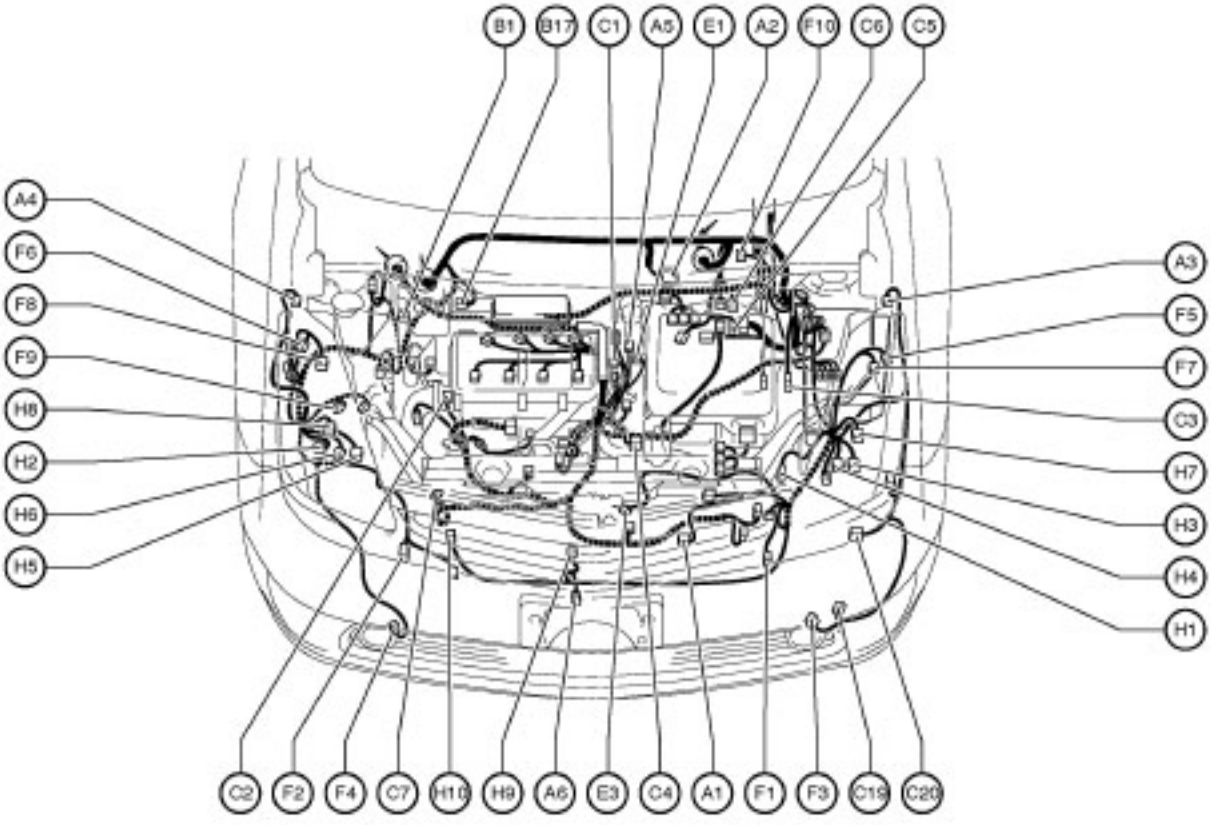

A 1 A/C Condenser Fan Motor
A 2 ABS & BA & TRAC & VSC Actuator
A 3 ABS Speed Sensor Front LH
A 4 ABS Speed Sensor Front RH
A 5 Air Fuel Ratio Sensor (Bank 1 Sensor 1)
A 6 Ambient Temp. Sensor

B 1 Brake Fluid Level Warning SW
B17 Brake Master Stroke Simulator Cylinder Assembly

C 1 Camshaft Position Sensor
C 2 Camshaft Timing Oil Control Valve
C 3 Circuit Breaker Sensor
C 4 Compressor Assembly (Motor)
C 5 Converter
C 6 Converter
C 7 Crankshaft Position Sensor
C19 Coolant Heat Storage Tank Outlet Temp. Sensor
C20 Coolant Heat Storage Water Pump

E 1 Engine Coolant Temp. Sensor
E 3 Engine Hood Courtesy SW

F 1 Front Airbag Sensor LH
F 2 Front Airbag Sensor RH
F 3 Front Fog Light LH
F 4 Front Fog Light RH
F 5 Front Side Marker Light LH
F 6 Front Side Marker Light RH
F 7 Front Turn Signal Light LH
F 8 Front Turn Signal Light RH
F 9 Front Washer Motor
F10 Front Wiper Motor

H 1 Headlight Beam Level Control Actuator LH
H 2 Headlight Beam Level Control Actuator RH
H 3 Headlight Assembly LH
H 4 Headlight Assembly LH
H 5 Headlight Assembly RH
H 6 Headlight Assembly RH
H 7 Headlight LH
H 8 Headlight RH
H 9 Horn (High)
H10 Horn (Low)